Designation: F 1394 – 92 (Reapproved 1999)

Standard Test Method for Determination of Particle Contribution from Gas Distribution System Valves [1]

This standard is issued under the fixed designation F 1394; the number immediately following the designation indicates the year of original adoption or, in the case of revision, the year of last revision. A number in parentheses indicates the year of last reapproval. A superscript epsilon (ϵ) indicates an editorial change since the last revision or reapproval.

INTRODUCTION

Semiconductor clean rooms are serviced by high-purity gas distribution systems. This test method presents a procedure that may be applied for the evaluation of one or more components considered for use in such systems.

1. Scope

1.1 This test method covers gas distribution system components intended for installation into a high-purity gas distribution system.

1.1.1 This test method describes a procedure designed to draw statistically significant comparisons of particulate generation performance of valves tested under aggressive conditions.

1.1.2 This test method is not intended as a methodology for monitoring on-going particle performance once a particular valve has been tested.

1.2 This test method utilizes a condensation nucleus counter (CNC) applied to in-line gas valves typically used in semiconductor applications. It applies to automatic and manual valves of various types (such as diaphragms or bellows), 6.3 through 12.7-mm (¼ through ½-in.) size. For applications of this test method to larger valves, see the table in the appendix.

1.2.1 Valves larger than 12.7 mm (½ in.) can be tested by this methodology. The test stand must be sized accordingly. Components larger than 12.7 mm (½ in.) should be tested while maintaining a Reynolds number of 20 000 to 21 000. This is the Reynolds number for 12.7-mm (½-in.) components tested at a velocity of 30.5 m/s (100 ft/s).

1.3 *Limitations*:

1.3.1 This test method is applicable to total particle count greater than the minimum detection limit (MDL) of the condensation nucleus particle counter and does not consider classifying data into various size ranges.

1.3.1.1 It is questionable whether significant data can be generated from nondynamic components (such as fittings and short lengths of tubing) to compare, with statistical significance, to the data generated from the spool piece. For this reason, this test method cannot reliably support comparisons between these types of components.

1.3.1.2 If detection or classification of particles, or both, in the size range of laser particle counter (LPC) technology is of interest, an LPC can be utilized for testing components. Flow rates, test times, sampling apparatus, and data analysis outlined in this test method do not apply for use with an LPC. Because of these variations, data from CNCs are not comparable to data from LPCs.

1.3.2 This test method specifies flow and mechanical stress conditions in excess of those considered typical. These conditions should not exceed those recommended by the manufacturer. Actual performance under normal operating conditions may vary.

1.3.3 The test method is limited to nitrogen or clean dry air. Performance with other gases may vary.

1.3.4 This test method is intended for use by operators who understand the use of the apparatus at a level equivalent to six months of experience.

1.3.5 The appropriate particle counter manufacturer's operating and maintenance manuals should be consulted when using this test method.

1.4 The values stated in SI units are to be regarded as the standard. The inch-pound units given in parentheses are for information only.

1.5 *This standard does not purport to address all of the safety concerns, if any, associated with its use. It is the responsibility of the user of this standard to establish appropriate safety and health practices and determine the applicability of regulatory limitations prior to use.* Specific hazard statements are given in Section 6, Hazards.

[1] This test method is under the jurisdiction of ASTM Committee F-1 on Electronics and is the direct responsibility of Subcommittee F01.10 on Processing Environments.

Current edition approved May 15, 1992. Published July 1992.

Copyright © ASTM International, 100 Barr Harbor Drive, PO Box C700, West Conshohocken, PA 19428-2959, United States.

2. Referenced Documents

2.1 *ASTM Standards:*

FED-STD-209D Federal Standard Clean Room and Work Station Requirements, Controlled Environment [2]

3. Terminology

3.1 *Definitions of Terms Specific to This Standard:*

3.1.1 *background counts*—counts contributed by the test apparatus (including counter electrical noise) with the spool piece in place of the test object.

3.1.2 *condensation nucleus counter (CNC)*—light scattering instrument that detects particles in a gaseous stream by condensing supersaturated vapor upon the particles.

3.1.3 *control product*—sample component that gives consistent, stabilized counts at or below the expected counts from the test components. The product is run periodically in accordance with the test protocol to ensure that the system is not contributing particles significantly different from expected levels.

3.1.3.1 *Discussion*—The control product may have to be changed periodically if its performance degrades with testing. Between tests, the control product must be bagged in accordance with the original manufacturer's packaging and stored in a clean manner. The control product is used to allow the system to consider the disruption caused by the activation of any valve under test, such as significant fluctuations in flow, pressure, turbulence, and vibration.

3.1.4 *dynamic test*—test performed to determine particle contribution as a result of valve actuation.

3.1.5 *impact test*—test performed to determine particle contribution as a result of mechanical shock while the component is in the fully open position.

3.1.6 *sampling time*—the time increment over which counts are recorded.

3.1.7 *sample flow rate*—the volumetric flow rate drawn by the counter for particle detection. The counter may draw higher flow for other purposes (for example, sheath gas).

3.1.8 *spool piece*—a null component consisting of a straight piece of electropolished tubing and appropriate fittings used in place of the test component to establish the baseline.

3.1.9 *standard conditions*—101.3 kPa, 20°C (14.73 psia, 68°F).

3.1.10 *static test*—a test performed on an as-received component in the fully open position. This test establishes particulate contribution by the valve to the counting system.

3.1.11 *test duration*—total time required to complete the test procedure.

3.1.12 *test flow rate*—volumetric flow at test pressure and temperature.

3.1.13 *test pressure*—pressure immediately downstream of the test component.

3.1.14 *test velocity*—the average velocity of the test gas in the outlet tube of the test valve (volumetric flow at ambient pressure and temperature divided by the internal cross-sectional area of the valve outlet). In this test method, the test velocity is specified to maintain a Reynolds number of 20 000 to 21 000 (see the table in the appendix).

3.2 *Abbreviations:Abbreviation:*

3.2.1 *LPC*—laser particle counter.

4. Significance and Use

4.1 The purpose of this test method is to define a procedure for testing components intended for installation into a high-purity gas distribution system. Application of this test method is expected to yield comparable data among components tested for the purposes of qualification for this installation.

4.2 *Background Testing*—This test method uses background testing to ensure that the system is not contributing particles above a low, acceptable level. This ensures that counts seen are from the test device, not from a contaminated system. The techniques used to obtain background counts do not produce conditions identical to the conditions existing when a test device is in place. It is recommended that the control products be run periodically to see that they give consistent results. These control products should be the lowest particle release products. They will be additional proof that the system is not contributing excess particles during the static, dynamic, or impact portions of the test.

4.3 This test method can be used for testing lengths of tubing. The flow criteria will be identical to that indicated for valves. A tubing test would only include the static background, the impact background, and the static and impact portions of the method. A dynamic portion could be added by actuating the upstream pneumatic valve (PV1), thus creating a flow surge to the test length of tubing.

5. Apparatus

5.1 *Test Gas*—Clean, dry nitrogen or air is to be used (minimum dryness − 40°C (−40°F) dew point at 689 kPa gage pressure (100 psig) and <10 ppm total hydrocarbons).

5.2 *Filters*—Electronics grade filters are required to provide ''particle-free" test gas. Each filter must be no more than 10 % penetration in accordance with manufacturer's specifications to 0.02 µm particles and have a pressure drop of less than 6.89 kPa at 0.00471 m^3/s at 689 kPa gage pressure (1 psi at 10 standard ft^3/min at 100 psig inlet). The filter must be capable of passing less than 70 particles ≥ 0.02 µm/m^3 (2 particles ≥ 0.02 µm/ft^3) of test gas under test conditions.

5.3 *Pressure Regulator*—A high-purity electronics grade pressure regulator is required to maintain system test pressure.

5.4 *Pressure Gage*—A high-purity electronics grade pressure transducer or gage is required to monitor system test pressure.

5.5 *Low-Flow Control Device*—A high-purity electronics grade 0 to 0.00472 m^3/s flow control device is required for testing 6.3, 9.5, and 12.7-mm (¼ , ⅜ and ½-in.) components.

5.6 *High-Flow Control Device*—A high-purity electronics grade 0 to 0.0142 m^3 flow control device is required for testing 19, 25.1 and 50.8-mm (¾ , 1 and 2-in.) components.

5.7 *Tubing*—High-purity electronics grade, electropolished 12.7-mm (½-in.) 316-L tubing is required. Larger diameter tubing is required for testing components larger than 12.7 mm (½ in.).

[2] Available from Standardization Documents Order Desk, Bldg. 4 Section D, 700 Robbins Ave., Philadelphia, PA 19111-5094, Attn: NPODS.

5.8 *Sampler*—The sampler is to be constructed according to the drawing (see Fig. 1) and calculations shown in 8. The sampler collects gas from the stream exiting the test device, where the sample is near-isokinetic in design.

5.9 *Upstream Adaptor*—The upstream adaptor piece connects 12.7-mm (½-in.) tubing to the test device. For 12.7-mm (½-in.) test devices, the adaptor is a simple face-seal connector. For 6.3-mm (¼-in.) test devices, the adaptor is a smooth transition between 6.3 and 12.7-mm (¼ and ½-in.) face-seal connections.

5.10 *Downstream Adaptor*—The downstream adaptor piece connects 12.7-mm (½-in.) tubing of the sampler to the test device. For 12.7-mm (½-in.) test devices, the adaptor is a simple face seal connector. For 6.3-mm (¼-in.) test devices, the adaptor is a tapered cone between 6.3 and 12.7-mm (¼ in. and ½-in.) face-seal connections.

5.11 *Spool Pieces*—Spool pieces shall be the same diameter as the fittings on the test piece and be 15 cm (6 in.) in length. The spool piece is to be installed in the system in place of the test device while obtaining background counts for the system.

5.12 *Fittings*—Use face seal connectors or compression fittings depending on test component end connections.

5.13 *Gaskets*—Use tetrafluoroethylene (TFE) or nylon gaskets for attaching the test device and adapter pieces. New gaskets should be used for each new connection. The use of TFE gaskets is recommended in order to minimize the particles that may be generated by installation of the test piece.

5.14 *Mechanical Shock Device*—A weight dropped on the test device is used to provide mechanical shock. Drawing and component specifications are shown in Section 7.

5.15 *Instrumentation*—A CNC capable of detecting particles as small as 0.02 µm with counting efficiency of 50 % **(1)** [3] with a sample flow rate of 0.236×10^{-4} m^3/s, is to be used for particle counting. Test durations in this test method have been established based on a sampling flow rate of standard 0.0236 L/s.

[3] The boldface numbers in parentheses refer to a list of references at the end of the text.

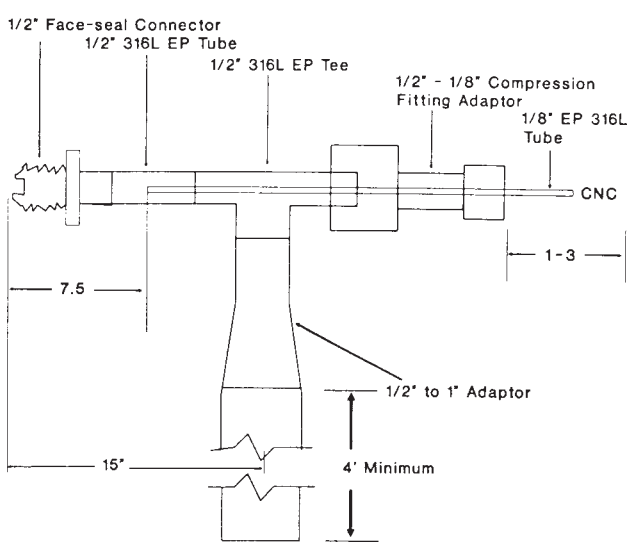

FIG. 1 Sampling Device for Testing ¼ , ⅜ , and ½ in. (6.3, 9.5, and 12.7 mm) Valves

6. Hazards

6.1 Exhaust from the CNC may contain toxic or flammable vapors, or both. Make sure that it is properly vented.

6.2 This test method is to be conducted at a normal indoor temperature of between 18°C (64°F) and 26°C (78°F). Environmental temperature within this range is not expected to have any measurable effect on particle detection.

6.3 Test apparatus shall be enclosed in a Class 100 environment (in accordance with FED-STD-209D). If a clean hood is used, locate the hood within a clean environment. Use procedures necessary to maintain Class 100 when handling test apparatus and test component.

6.4 Take care to protect the test apparatus from excessive vibration. For example, vacuum pumps and compressors shall be isolated from the system.

7. Sampling

7.1 The average velocity of gas flowing through the sampler shall approximate the average velocity in the tubing in which the sampler is inserted. The sample flow rate used to calculate the sampler diameter is the total flow drawn by the counter. A typical CNC counter draws 0.472×10^{-4} standard m^3/s (0.1 standard ft^3/min) of which only 0.236×10^{-4} standard m^3/s is used for sampling.

7.2 Gradual expansion to atmospheric pressure is used for sampling. Avoid critical orifice expansion due to its complexity and potential maintenance problems.

7.3 The tip of the sampling probe should have a 30° taper on the outside diameter.

7.4 The pick-off point shall be centered within the flow stream.

7.5 The pick-off point should be approximately 15 diameters of the primary flow tube upstream or downstream of any connection.

7.6 There is enough volume in the exhaust portion of the sampler to supply the CNC for 1 min. This volume represents 60 times the volume that will be drawn by the CNC while the valve is closed during the dynamic testing.

7.7 Nominal sample tube diameters have been calculated and matrixed in the table in the appendix. In most cases, these approximate the actual diameters needed for isokinetic sampling, so that standard tube sizes can be used. Under static flow conditions the sampler size is within 50 % of the size required to achieve isokinetic sampling. For particles of interest < 0.5 µm, Hinds and Fissan **(2, 3)** indicate that any likely isokinetic sampling biases are insignificant. During dynamic testing, isokinetic sampling is compromised regardless of the sample tube size.

7.7.1 To establish isokinetic sampling condition (refer to Fig. 2 and **(4)**):

$$V_1 = V_2 \tag{1}$$

$$Q = AV \tag{2}$$

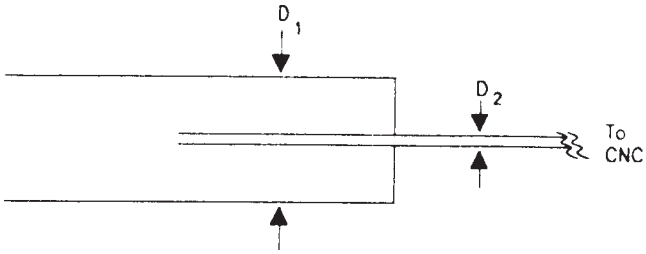

FIG. 2 Isokinetic Sampler Calculation

$$Q_1 / A_1 = Q_2 / A_2 \quad (3)$$

$$A_2 = A_1 (Q_2 / Q_1) \quad (4)$$

$$D_2 = D_1 (Q_2 / Q_1)^{\frac{1}{2}} \quad (5)$$

where:
Q = flow rate (volumetric), m^3/s,
A = area (internal cross section), m^2,
V = velocity (average), m/s,
D = diameter (internal), m,
1 = main flow line, and
2 = sample flow line.

7.7.1.1 If pressure correction at point of flow control device is needed, then:

$$Q_s = [(P + 101.3) / 101.3]^{1/2} \times Q_A \quad (6)$$

where:
P = absolute pressure, kPa,
Q_A = actual flow rate, m^3/s, and
Q_s = standard flow rate, m^3/s.

Temperature variances are assumed to be negligible.

8. Calibration

8.1 Calibrate instruments regularly, according to manufacturer's recommendations. For the CNC, this includes routine checks of sample flow rate, liquid level, and zero.

8.2 The CNC and data collection equipment must have power surge suppression protection.

8.3 *Setup and Schematic*—See Fig. 3.

NOTE 1—Details of components and connector layout and configuration prior to the test component or valve outlet are not critical and may be arranged for optimum convenience until connections are made to the components shown in Fig. 2. The components of Fig. 2 shall be configured as shown.

8.4 Install the spool piece when the test stand is not in use. Maintain a continuous low flow to purge the system (see 9.5). The particle counter may be turned off. For an extended shutdown, the system (excluding the CNC) should be pressurized and capped.

8.5 After initial construction, the spool piece should be installed and the system should be cleaned by flowing clean dry gas at 0.0005 to 0.001 m^3/s and tapping all components (except the CNC) downstream of the final filter. This procedure should be followed by a start-up phase that characterizes system cleanliness by conducting the entire test protocol with the control product (see 3.1.3) installed. This start-up phase shall continue and be repeated as necessary until the counts from the control product have stabilized at or below the expected number of counts from the test components.

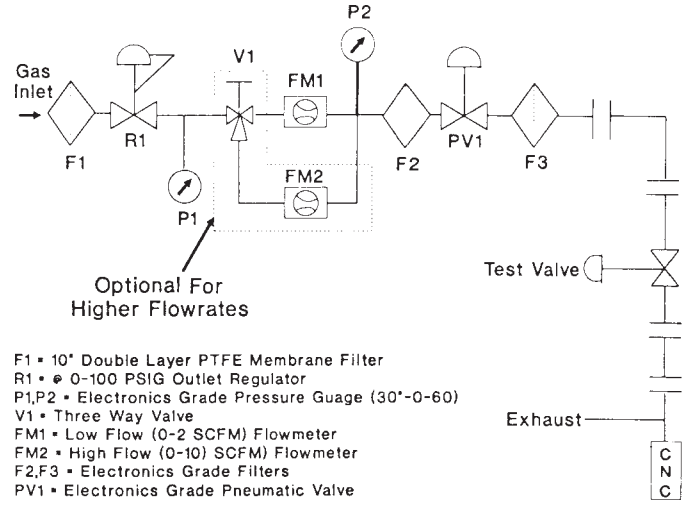

NOTE 1—See Fig. 1 for detail.

FIG. 3 Schematic of Particle Test Loop

9. Procedure

NOTE 2—Ensure the counter is counting continuously and reporting data every minute. For the duration of the test, the counter shall be continuously counting, except where noted in the test protocol.

9.1 *Background Test*:

9.1.1 Ensure that the spool piece and proper adapters are in place on the test apparatus.

9.1.2 Close the pneumatic valve (PV1). Set the regulator to 206.7 kPa gage pressure (30 psig). Open the pneumatic valve (PV1) to establish flow. Using the flow control device, set the test flow rate according to the size of components to be tested (see the table in the appendix). The volumetric flow rate required to maintain the test velocity is calculated at the outlet of the test component, assuming near atmospheric conditions. This flow rate may need to be corrected for the flowmeter outlet pressure if this device is not calibrated for standard conditions. Measure the static background count. Background count is established when the counter has sampled a minimum of 0.00142 standard m^3(3 standard ft^3), and the arithmetic average during the last 0.00142 standard m^3/s (3 standard ft^3/min) of gas sampled is < 70 particles/standard m^3(<2 particles/standard ft^3). At a sample flow rate of 0.236×10^{-4} m^3/s (0.05 standard ft^3/min), the time required is 1 h. Ensure that the background counts are stable or decreasing. If background cannot be achieved after 0.00283 standard m^3(6 standard ft^3) have been sampled, there may be a problem with the counter or test apparatus requiring repair or modification.

9.1.3 Actuate the pneumatic valve at 30 cycles per minute to measure the background counts under dynamic test conditions. A cycle consists of 1 s duration for the ''off" and ''on" portion of valve actuation. Dynamic background count is established when the counter has sampled a minimum of 0.00142 standard m^3(3 standard ft^3), and the arithmetic average during the last

0.00142 standard m^3(3 standard ft ^{3}) of gas sampled is 105 particles/standard m^3(< 3 particles/standard ft^3). (Estimated dynamic background count will be verified and altered if necessary during the validation phase of this test method.) At a sample flow rate of 0.236×10^{-4} m^3/s (0.05 standard ft^3/min), the time required is 1 h. If dynamic background cannot be achieved after 0.00283 standard m ^{3}(6 standard ft^3) have been sampled, there may be a problem with the counter or test apparatus, requiring repair or modification.

9.1.4 Stop the pneumatic valve cycling. Flush the system for 10 min under static test conditions.

9.1.5 Impact the spool piece once per minute for 10 min with the mechanical shock device (see Fig. 4). The impact background count should be 140 particles/standard m^3(<4 particles/standard ft^3) over the 10 min of the test. (Estimated impact background count will be verified and altered if necessary during the validation phase of this test method.) If impact background cannot be achieved, repeat the shock a second time. If the impact background count specification still cannot be met, there may be a problem with the counter or test apparatus.

9.1.6 Flush the system for 30 min at the test flow rate. Record the resulting count.

9.1.7 Turn the CNC off.

9.2 *Static Test*:

9.2.1 Using the flow control device, decrease the flow rate to 0.472×10^{-4} to 0.944×10^{-4} standard m^3/s (0.1 to 0.2 standard ft^3/min), so that flow remains in the system while the test component is installed.

9.2.2 Remove the spool piece by first disconnecting the downstream fitting and then the upstream fitting. Immediately install the test component in a fully open position by first connecting the upstream fitting and then the downstream fitting. Removal of the spool piece and installation of the test component to minimize extraneous contamination. Take extreme care to minimize contamination of the test apparatus during this operation. Remove the test component from its inner bag in the Class 100 test area. If the test component has mechanical fittings, properly connect these fittings. If the test component has tube ends, install the component with clean compression fittings. Do not permanently crimp any ferrules onto the tube stubs. Nylon ferrules are acceptable.

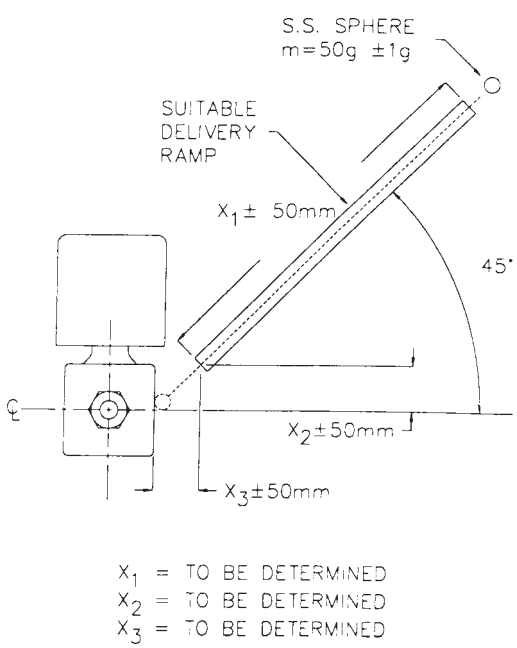

FIG. 4 Mechanical Shock Device

9.2.3 Using the flow control device, increase the flow to obtain the test velocity (see the table in the appendix). Velocity equals the volumetric flow divided by the cross sectional area of the outlet. The volumetric flowrate required to maintain the test velocity is calculated at the outlet of the test component, assuming near atmospheric conditions. This flow rate may need to be corrected for the flowmeter outlet pressure if this device is not calibrated for standard conditions.

9.2.4 Turn on the counter and conduct the static test. Test the valve in a fully open position until 0.00142 standard m^3 (3 standard ft^3) of gas have been sampled. Cumulative data should be recorded at 1-min intervals.

9.3 *Dynamic Test*:

9.3.1 This test is to immediately follow the static test. To conduct the dynamic test, actuate the valve at the rate of 30 cycles/min for 60 min. A cycle consists of ''off" and ''on" actuation of the valve. Make sure that the off and on cycles are of equal duration.

9.3.2 *Manual Valve Testing*—The difference between automatic and manual valve testing is in the dynamic test. There are toggle, ¼-turn, and multiple-turn valves. Make sure that these valves are only closed for 1 s. Make sure that the multiple turn valves are opened for a duration of 2 s, remain open for 1 s, closed for 2 s, and remain closed for 1 s. An automatic actuator for the manual valve is recommended. For ¼-turn and toggle valves, assume the open and closing cycles take about 1 s. The dynamic portion of the test runs for 60 min. In multi-turn and quarter-turn manual valves with plastic seats, the torque applied, either by hand or through automation, will affect the deformations and resulting particulate generation. This potentially limits the ability to compare test data generated from different test stands due to varying torque values.

NOTE 3—Extended dynamic testing can be used as an optional test for cleanliness of dynamic components after extended use. Dynamic components can be cycled off line, in a clean environment, then inserted into the test apparatus and tested in accordance with this test method to determine performance.

9.4 *Impact Test*—This test shall immediately follow the dynamic test. Maintain the test flow rate for 30 min, with the valve in the fully open position. Impact the valve once a minute for 10 min, using the mechanical shock device. Maintain the test flow rate for 30 min.

9.5 Turn the counter off and then decrease the test gas flow rate to approximately 0.00023 standard m^3/s.

9.6 Remove the test valve by first disconnecting the downstream fitting and then the upstream fitting, and immediately install the spool piece by connecting the upstream fitting followed by the downstream fitting.

9.7 Point of use filters (of any type) are tested similarly. During the dynamic test, the upstream pneumatic valve (PV1) is actuated. Static and impact tests are the same as the valve

test. Conduct tests at the maximum rated flow as specified by the manufacturer. Comparisons can only be made on filters that were tested at the same flow rate.

NOTE 4—This test will yield cleanliness data on ''as received" filters. Efficiency tests are also required to fully characterize filter performance.

10. Calculation

10.1 *Data Reduction*—Perform comparative calculations based on the VanSlooten guidelines **(5)**. The analysis determines the significance of the difference between the mean particle concentration of the test device and the background. It can also determine the significance of difference in particle concentrations between test devices.

10.2 *Definition of Poisson Distribution*:

k = particle counts,
v = 0.00023 standard m^3(0.5 standard ft^3), sample volume,
λ = k/v = mean counts/unit of volume,
S^2 = k/v^2 = variance, and
S_D = difference of variance = $(S_x^2 + S_y^2)^{1/2}$, where S_x + S_y are the variances of two data groups being compared.

10.3 To determine whether there is a difference between two data groups requires determining the test statistic and the critical value.

10.3.1 *Test Statistic*:

where:
λ_D = difference in mean counts/unit of volume,
λ_x = for Group x, the mean counts/unit of volume, and
λ_y = for Group y, the mean counts/unit of volume.

10.3.2 *Critical Value:* —

$$C = Z_\beta S_D$$

Z_β is the normal deviate and is determined by the desired level of confidence. For the purpose of this test method:

$Z_{0.98}$ = 98 % confidence = 2.08,
$Z_{0.99}$ = 99 % confidence = 2.33, and
$Z_{0.999}$ = 99.9 % confidence = 3.17.

10.3.3 Using these two values, it may be stated with the appropriate confidence level that if:

$\lambda_D > C$, then the difference is significant

or,

$\lambda_D < C$, then the difference is not significant

10.3.4 Sample calculations based on data shown in Figs. X1.1-X1.6.

10.4 To determine if Valve A generated a significantly greater number of particles (statistically) than background during the first 10 min of the static test:

10.4.1 For the valve data during the first 10 min of the static test:

k = 47 counts,
v = 0.00023 standard m^3(0.5 standard ft^3)
λ_1 = k/v = 94, and
s_1^2 = k/v^2 = 188.

10.4.2 For the background data during the first 10 min:

k = 3
v = 0.00023 standard m^3(0.5 standard ft^3),
λ_2 = k/v = 6, and
S_2^2 = k/v^2 = 12.

Then: $S_D = (S_1^2 + S_2^2)^{1/2} = (188 + 12) = 14.14$ and $\lambda_D = \lambda_1 - \lambda_2 = 94 - 6 = 88$.

10.4.3 The critical value in percent is calculated as:

C_{98} = $Z_\beta S_D$, where $Z_\beta = 2.08$
C_{98} = 29.41, or
C_{99} = $Z_\beta S_D$, where $Z_\beta = 2.33$
C_{99} = 32.95, or
$C_{99.9}$ = $Z_\beta S_D$, where $Z_\beta = 3.17$,
$C_{99.9}$ = 44.82.

10.4.4 λ_D is greater than the percent of $C_{99.9}$; therefore, it can be stated with 99.9 % confidence that Valve A generated a significantly greater number of particles (statistically) than background during the first 10 min of the static test.

10.5 To determine if Valve B generated a significantly greater number of particles (statistically) than Valve A during the first 10 min of dynamic testing:

10.5.1 Applying the same calculations in percent as in 10.3 to these two sets of data to determine that:

λ_D = 114,
C_{98} = 102.5,
C_{99} = 114.8, and
$C_{99.9}$ = 156.2.

10.5.2 λ_D is greater in percent than C_{98} but not greater than C_{99}; therefore, it can be stated with only 99 % confidence that Valve B generated a statistically significant greater number of particles than Valve A during the first 10 min of dynamic testing.

10.6 For comparing counts generated by a single valve to background counts, the data shown on the summary sheet should be collected on each valve and the calculations performed. If more than one of the same valve is tested, data should be summed and calculations performed based on the total number of counts and volume sampled.

10.7 For comparing counts generated by a single valve type to counts generated by a different valve type, the data shown on the summary sheet should be collected and the calculations performed. If more than one of the same valve is tested, data should be summed and calculations performed based on the total number of counts and volume sampled.

10.8 A summary of all confidence statements should accompany the data and be formulated as follows in Table 1:

10.9 A summary of all confidence statements for comparisons between valves should accompany the data and be formulated as follows in Table 2:

TABLE 1 Particle Data Confidence Statement Summary Sheet

Valve A generated more particles than background			
	98 % Confident (Y/N)	99 % Confident (Y/N)	99.9 % Confident (Y/N)
Static, first 10 min	_____	_____	_____
Static, 60 min	_____	_____	_____
Dynamic, first 10 min	_____	_____	_____
Dynamic, 60 min	_____	_____	_____
Impact, first minute	_____	_____	_____
Impact, first 10 min	_____	_____	_____
Impact, 40 min	_____	_____	_____

TABLE 2 Particle Data Confidence Statement Summary Sheet

Valve B generated more particles than Valve A			
	98 % Confident (Y/N)	99 % Confident (Y/N)	99.9 % Confident (Y/N)
Static, first 10 min	_____	_____	_____
Static, 60 min	_____	_____	_____
Dynamic, first 10 min	_____	_____	_____
Dynamic, 60 min	_____	_____	_____
Impact, first minute	_____	_____	_____
Impact, first 10 min	_____	_____	_____
Impact, 40 min	_____	_____	_____
Valve A generated more particles than Valve B			
	98 % Confident (Y/N)	99 % Confident (Y/N)	99.9 % Confident (Y/N)
Static, first 10 min	_____	_____	_____
Static, 60 min	_____	_____	_____
Dynamic, first 10 min	_____	_____	_____
Dynamic, 60 min	_____	_____	_____
Impact, first minute	_____	_____	_____
Impact, first 10 min	_____	_____	_____
Impact, 40 min	_____	_____	_____

11. Report

11.1 Report the following test conditions:

11.1.1 Date and time of test,

11.1.2 Operator,

11.1.3 Test flow rate, m^3/s (standard ft^3/min),

11.1.4 Test pressure, kPa gage pressure (psig),

11.1.5 Valve type, manufacturer, serial number, lot number, and model number,

11.1.6 CNC manufacturer, serial number, sample flow rate, standard m^3/s (standard ft^3/min),

11.1.7 Test gas type and dew point (°C) model number, and calibration date,

11.1.8 Schematic of the test apparatus, including manufacturer's and model numbers of all test apparatus components,

11.1.9 Calibration dates for the flow meters and the test date should also be reported (see Fig. X1.7 for sample data sheet).

11.2 *Data Acquisition*—The data link between the counter and any data acquisition system should be qualified and checked for accuracy and consistency.

11.3 *Data Presentation*:

11.3.1 Graph the static, dynamic and impact portions of the test separately as counts per min (measured by the counter) versus time, including the appropriate background measured with the spool piece in place) with each. Also graph the entire data set as counts per min versus time. If different valves are to be compared, graph their entire data sets together. (See Figs. X1.8-X1.11).

11.3.2 Record and present the entire raw data set in tabular form as shown in Fig. X1.12, and Fig. X1.13, .

12. Precision and Bias

12.1 The precision and bias of the data generated by this test method is limited to the precision and bias of the particle measuring instruments utilized.

13. Keywords

13.1 condensation nucleus center; contamination; gas distribution; gas distribution valves; isokinetic sampling; nitrogen; particle contamination; particle counter; particles; semiconductor processing

APPENDIX

(Nonmandatory Information)

X1. Additional Test Data

X1.1 See Table X1.1 and Figs. X1.1-X1.13.

TABLE X1.1 Matrix of Typical Test Flow Rates Nominal Outside Diameters

0 Test Component Nominal Diameter, in.	1 Test Component Outlet Inside Diameter, in.	2 Reynolds Number	3 Average Test Velocity, ft/s	4 Test Flow Rate, ft^3/min
1 ¼	0.180	20 600	224	2.4
2 ⅜	0.305	20 600	132	4.0
3 ½	0.402	20 600	100	5.3
4 ¾	0.652	20 600	62	8.6
5 1	0.870	20 600	46	11.4
6 2	1.870	20 600	22	25.2

0 Test Component Nominal Diameter, in.	5 Expansion Cone Inside Diameter, in.	6 Sample Tube Inside Diameter 80.10 ft^3/min Flowrate, in.	7 Sample Tube Outside Diameter Nominal, in.
1 ¼	0.43	0.09	⅛
2 ⅜	0.43	0.07	⅛
3 ½	0.43	0.06	⅛
4 ¾	1.87	0.20	¼
5 1	1.87	0.18	¼
6 2	1.87	0.12	¼

1 in. = 25.4 mm.

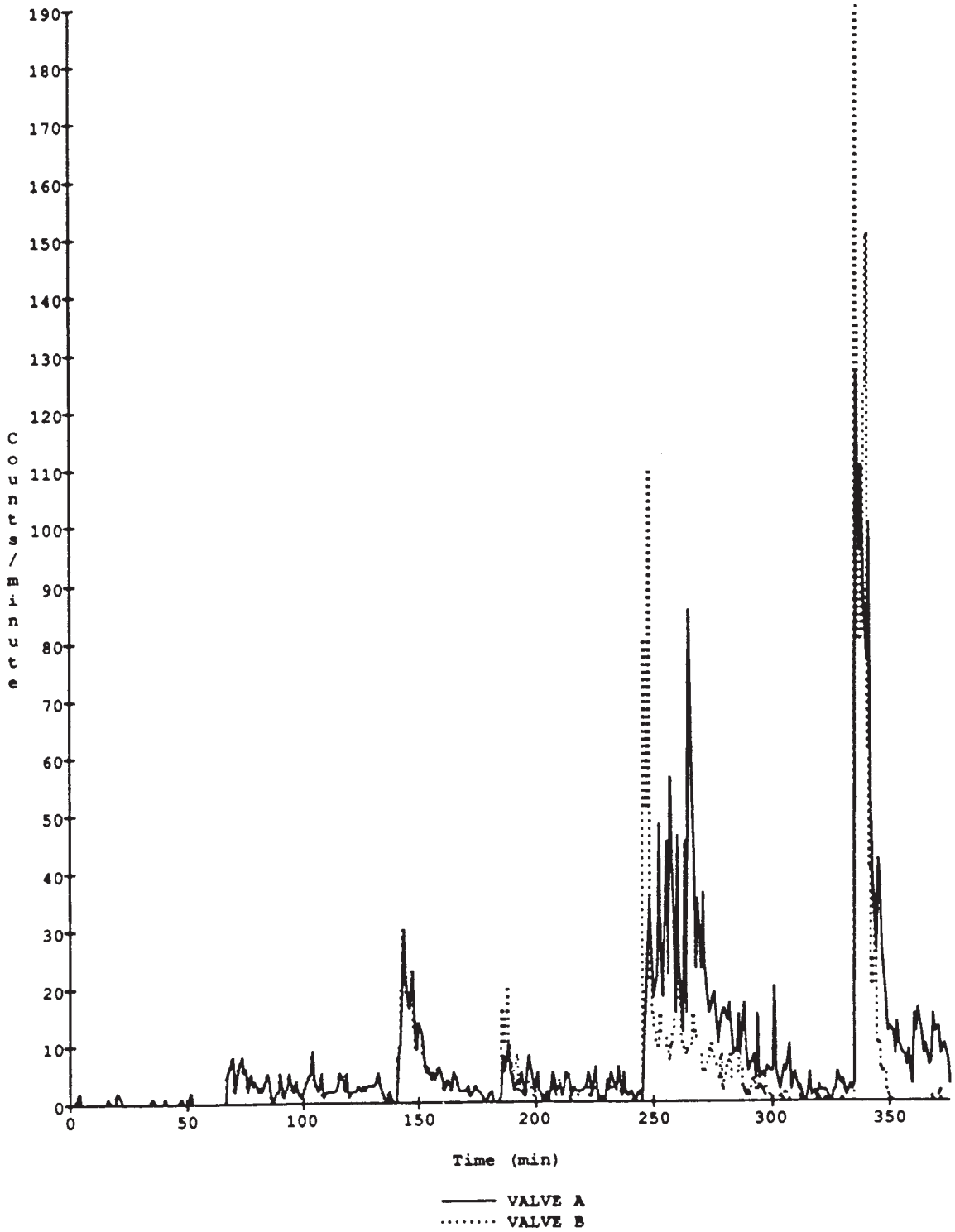

FIG. X1.1 Valves A and B Complete Test

0	1 time (min)	2 background counts	3 test counts
1	1	0	8
2	2	0	5
3	3	1	10
4	4	0	5
5	5	0	4
6	6	0	2
7	7	0	4
8	8	0	3
9	9	0	5
10	10	0	1
11	11	0	5
12	12	0	8
13	13	0	6
14	14	0	2
15	15	0	4
16	16	1	5
17	17	0	2
18	18	0	0
19	19	0	1
20	20	0	2
21	21	0	0
22	22	0	5
23	23	0	4
24	24	0	2
25	25	0	3
26	26	0	1
27	27	0	2
28	28	0	5
29	29	0	4
30	30	0	1
31	31	0	2
32	32	0	2
33	33	0	2
34	34	1	2
35	35	0	2
36	36	0	3
37	37	0	5
38	38	0	4
39	39	0	1
40	40	0	6
41	41	0	2
42	42	0	0
43	43	0	1
44	44	0	0
45	45	0	4
46	46	1	2
47	47	0	5
48	48	0	3
49	49	0	2
50	50	0	6
51	51	0	1
52	52	0	5
53	53	0	2
54	54	0	1
55	55	0	2
56	56	0	1
57	57	0	0
58	58	0	1
59	59	0	2
60	60	0	0

FIG. X1.2 Valve A Static Test Data

0	1 time (min)	2 background counts	3 test counts	0	1 time (min)	2 background counts	3 test counts
1	1	0	10	58	58	2	2
2	2	5	27	59	59	3	4
3	3	6	35	60	60	2	6
4	4	8	26				
5	5	2	18				
6	6	4	22				
7	7	6	48				
8	8	8	26				
9	9	5	18				
10	10	6	45				
11	11	2	22				
12	12	5	56				
13	13	3	43				
14	14	4	15				
15	15	2	46				
16	16	3	23				
17	17	2	12				
18	18	3	45				
19	19	5	15				
20	20	4	85				
21	21	1	55				
22	22	0	43				
23	23	2	23				
24	24	2	35				
25	25	5	23				
26	26	1	36				
27	27	2	23				
28	28	3	15				
29	29	5	14				
30	30	2	18				
31	31	2	19				
32	32	4	10				
33	33	2	13				
34	34	1	15				
35	35	2	16				
36	36	3	14				
37	37	4	17				
38	38	5	13				
39	39	9	8				
40	40	4	9				
41	41	2	15				
42	42	3	8				
43	43	5	17				
44	44	1	9				
45	45	2	5				
46	46	2	6				
47	47	2	8				
48	48	2	4				
49	49	2	15				
50	50	3	4				
51	51	5	5				
52	52	4	4				
53	53	2	6				
54	54	5	5				
55	55	1	5				
56	56	2	20				
57	57	2	5				

FIG. X1.3 Valve A Dynamic Test Data

0	1 time (min)	2 background counts	3 test counts
1	1	8	126
2	2	10	95
3	3	30	110
4	4	22	88
5	5	18	76
6	6	16	100
7	7	23	52
8	8	12	38
9	9	9	26
10	10	14	42
11	11	5	38
12	12	4	26
13	13	6	18
14	14	5	12
15	15	4	13
16	16	2	12
17	17	4	8
18	18	3	14
19	19	2	10
20	20	5	8
21	21	4	8
22	22	2	6
23	23	2	9
24	24	2	3
25	25	2	15
26	26	3	12
27	27	1	16
28	28	2	12
29	29	3	8
30	30	2	10
31	31	2	6
32	32	1	7
33	33	0	15
34	34	0	12
35	35	1	13
36	36	2	8
37	37	0	9
38	38	0	10
39	39	0	7
40	40	1	3

FIG. X1.4 Valve A Impact Test Data

0	1 counts	2 time (min)	0	1 counts	2 time (min)	0	1 counts	2 time (min)
1	0	1	58	0	58	115	3	115
2	0	2	59	0	59	116	5	116
3	1	3	60	0	60	117	4	117
4	2	4	61	0	61	118	2	118
5	0	5	62	0	62	119	5	119
6	0	6	63	0	63	120	1	120
7	0	7	64	0	64	121	2	121
8	0	8	65	0	65	122	2	122
9	0	9	66	0	66	123	2	123
10	0	10	67	5	67	124	3	124
11	0	11	68	6	68	125	2	125
12	0	12	69	8	69	126	3	126
13	0	13	70	2	70	127	2	127
14	0	14	71	4	71	128	3	128
15	0	15	72	6	72	129	3	129
16	1	16	73	8	73	130	3	130
17	0	17	74	5	74	131	3	131
18	0	18	75	6	75	132	5	132
19	0	19	76	2	76	133	3	133
20	2	20	77	5	77	134	2	134
21	1	21	78	3	78	135	1	135
22	0	22	79	4	79	136	0	136
23	0	23	80	2	80	137	2	137
24	0	24	81	3	81	138	1	138
25	0	25	82	2	82	139	0	139
26	0	26	83	3	83	140	0	140
27	0	27	84	5	84	141	8	141
28	0	28	85	4	85	142	10	142
29	0	29	86	1	86	143	30	143
30	0	30	87	0	87	144	22	144
31	0	31	88	2	88	145	18	145
32	0	32	89	2	89	146	16	146
33	0	33	90	5	90	147	23	147
34	0	34	91	1	91	148	12	148
35	1	35	92	2	92	149	9	149
36	0	36	93	3	93	150	14	150
37	0	37	94	5	94	151	12	151
38	0	38	95	2	95	152	8	152
39	0	39	96	2	96	153	5	153
40	1	40	97	4	97	154	6	154
41	0	41	98	2	98	155	4	155
42	0	42	99	1	99	156	5	156
43	0	43	100	2	100	157	4	157
44	0	44	101	3	101	158	6	158
45	0	45	102	4	102	159	5	159
46	0	46	103	5	103	160	4	160
47	1	47	104	9	104	161	2	161
48	0	48	105	4	105	162	4	162
49	0	49	106	2	106	163	3	163
50	0	50	107	3	107	164	2	164
51	2	51	108	5	108	165	5	165
52	0	52	109	1	109	166	4	166
53	0	53	110	2	110	167	2	167
54	0	54	111	2	111	168	2	168
55	0	55	112	2	112	169	2	169
56	0	56	113	2	113	170	2	170
57	0	57	114	2	114	171	3	171

FIG. X1.5 Valve A Complete Test Data

0	1 counts	2 time (min)	0	1 counts	2 time (min)	0	1 counts	2 time (min)
172	1	172	229	0	229	286	15	286
173	2	173	230	4	230	287	8	287
174	3	174	231	2	231	288	17	288
175	2	175	232	5	232	289	9	289
176	2	176	233	3	233	290	5	290
177	1	177	234	2	234	291	6	291
178	0	178	235	6	235	292	8	292
179	0	179	236	1	236	293	4	293
180	1	180	237	5	237	294	15	294
181	2	181	238	2	238	295	4	295
182	0	182	239	1	239	296	5	296
183	0	183	240	2	240	297	4	297
184	0	184	241	1	241	298	6	298
185	1	185	242	0	242	299	5	299
186	8	186	243	1	243	300	5	300
187	5	187	244	2	244	301	20	301
188	10	188	245	0	245	302	5	302
189	5	189	246	10	246	303	2	303
190	4	190	247	27	247	304	4	304
191	2	191	248	35	248	305	6	305
192	4	192	249	26	249	306	5	306
193	3	193	250	18	250	307	10	307
194	5	194	251	22	251	308	2	308
195	1	195	252	48	252	309	4	309
196	5	196	253	26	253	310	5	310
197	8	197	254	18	254	311	2	311
198	6	198	255	45	255	312	3	312
199	2	199	256	22	256	313	1	313
200	4	200	257	56	257	314	0	314
201	5	201	258	43	258	315	2	315
202	2	202	259	15	259	316	5	316
203	0	203	260	46	260	317	1	317
204	1	204	261	23	261	318	2	318
205	2	205	262	12	262	319	0	319
206	0	206	263	45	263	320	3	320
207	5	207	264	15	264	321	2	321
208	4	208	265	85	265	322	2	322
209	2	209	266	55	266	323	2	323
210	3	210	267	43	267	324	1	324
211	1	211	268	23	268	325	0	325
212	2	212	269	35	269	326	2	326
213	5	213	270	23	270	327	2	327
214	4	214	271	36	271	328	5	328
215	1	215	272	23	272	329	3	329
216	2	216	273	15	273	330	4	330
217	2	217	274	16	274	331	2	331
218	2	218	275	18	275	332	1	332
219	2	219	276	19	276	333	3	333
220	2	220	277	10	277	334	2	334
221	3	221	278	13	278	335	3	335
222	5	222	279	15	279	336	126	336
223	4	223	280	16	280	337	95	337
224	1	224	281	14	281	338	110	338
225	6	225	282	17	282	339	88	339
226	2	226	283	13	283	340	76	340
227	0	227	284	8	284	341	100	341
228	1	228	285	9	285	342	52	342

FIG. X1.5 Valve A Complete Test Data *(continued)*

0	1 counts	2 time (min)
343	38	343
344	26	344
345	42	345
346	38	346
347	26	347
348	18	348
349	12	349
350	13	350
351	12	351
352	8	352
353	14	353
354	10	354
355	8	355
356	8	356
357	6	357
358	9	358
359	3	359
360	15	360
361	12	361
362	16	362
363	12	363
364	8	364
365	10	365
366	6	366
367	7	367
368	15	368
369	12	369
370	13	370
371	8	371
372	9	372
373	10	373
374	7	374
375	3	375

FIG. X1.5 Valve A Complete Test Data *(continued)*

0	1 counts	2 time (min)	0	1 counts	2 time (min)	0	1 counts	2 time (min)
1	0	1	58	0	58	115	3	115
2	0	2	59	0	59	116	5	116
3	1	3	60	0	60	117	4	117
4	2	4	61	0	61	118	2	118
5	0	5	62	0	62	119	5	119
6	0	6	63	0	63	120	1	120
7	0	7	64	0	64	121	2	121
8	0	8	65	0	65	122	2	122
9	0	9	66	0	66	123	2	123
10	0	10	67	5	67	124	3	124
11	0	11	68	6	68	125	2	125
12	0	12	69	8	69	126	3	126
13	0	13	70	2	70	127	2	127
14	0	14	71	4	71	128	3	128
15	0	15	72	6	72	129	3	129
16	1	16	73	8	73	130	3	130
17	0	17	74	5	74	131	3	131
18	0	18	75	6	75	132	5	132
19	0	19	76	2	76	133	3	133
20	2	20	77	5	77	134	2	134
21	1	21	78	3	78	135	1	135
22	0	22	79	4	79	136	0	136
23	0	23	80	2	80	137	2	137
24	0	24	81	3	81	138	1	138
25	0	25	82	2	82	139	0	139
26	0	26	83	3	83	140	0	140
27	0	27	84	5	84	141	8	141
28	0	28	85	4	85	142	10	142
29	0	29	86	1	86	143	30	143
30	0	30	87	0	87	144	22	144
31	0	31	88	2	88	145	18	145
32	0	32	89	2	89	146	16	146
33	0	33	90	5	90	147	23	147
34	0	34	91	1	91	148	12	148
35	1	35	92	2	92	149	9	149
36	0	36	93	3	93	150	14	150
37	0	37	94	5	94	151	12	151
38	0	38	95	2	95	152	8	152
39	0	39	96	2	96	153	5	153
40	1	40	97	4	97	154	6	154
41	0	41	98	2	98	155	4	155
42	0	42	99	1	99	156	5	156
43	0	43	100	2	100	157	4	157
44	0	44	101	3	101	158	6	158
45	0	45	102	4	102	159	5	159
46	0	46	103	5	103	160	4	160
47	1	47	104	9	104	161	2	161
48	0	48	105	4	105	162	4	162
49	0	49	106	2	106	163	3	163
50	0	50	107	3	107	164	2	164
51	2	51	108	5	108	165	5	165
52	0	52	109	1	109	166	4	166
53	0	53	110	2	110	167	2	167
54	0	54	111	2	111	168	2	168
55	0	55	112	2	112	169	2	169
56	0	56	113	2	113	170	2	170
57	0	57	114	2	114	171	3	171

FIG. X1.6 Valve B Complete Test Data

0	1 counts	2 time (min)	0	1 counts	2 time (min)	0	1 counts	2 time (min)
172	1	172	229	0	229	286	5	286
173	2	173	230	2	230	287	10	287
174	3	174	231	2	231	288	2	288
175	2	175	232	3	232	289	1	289
176	2	176	233	2	233	290	2	290
177	1	177	234	2	234	291	1	291
178	0	178	235	3	235	292	4	292
179	0	179	236	1	236	293	3	293
180	1	180	237	3	237	294	1	294
181	2	181	238	2	238	295	3	295
182	0	182	239	1	239	296	2	296
183	0	183	240	2	240	297	1	297
184	0	184	241	1	241	298	3	298
185	1	185	242	0	242	299	1	299
186	16	186	243	1	243	300	0	300
187	10	187	244	2	244	301	0	301
188	20	188	245	0	245	302	0	302
189	10	189	246	80	246	303	1	303
190	6	190	247	50	247	304	1	304
191	4	191	248	110	248	305	0	305
192	8	192	249	20	249	306	2	306
193	2	193	250	15	250	307	1	307
194	2	194	251	10	251	308	0	308
195	1	195	252	9	252	309	0	309
196	2	196	253	15	253	310	0	310
197	4	197	254	11	254	311	0	311
198	3	198	255	12	255	312	1	312
199	1	199	256	9	256	313	0	313
200	2	200	257	7	257	314	0	314
201	3	201	258	10	258	315	0	315
202	2	202	259	15	259	316	0	316
203	1	203	260	25	260	317	0	317
204	1	204	261	23	261	318	0	318
205	1	205	262	10	262	319	0	319
206	0	206	263	9	263	320	1	320
207	3	207	264	8	264	321	0	321
208	2	208	265	9	265	322	0	322
209	1	209	266	10	266	323	1	323
210	4	210	267	15	267	324	0	324
211	2	211	268	12	268	325	0	325
212	2	212	269	10	269	326	0	326
213	4	213	270	9	270	327	0	327
214	5	214	271	5	271	328	0	328
215	0	215	272	5	272	329	0	329
216	2	216	273	7	273	330	1	330
217	3	217	274	9	274	331	0	331
218	1	218	275	11	275	332	0	332
219	2	219	276	8	276	333	0	333
220	2	220	277	5	277	334	0	334
221	2	221	278	4	278	335	0	335
222	3	222	279	8	279	336	190	336
223	1	223	280	2	280	337	80	337
224	1	224	281	6	281	338	80	338
225	3	225	282	7	282	339	95	339
226	2	226	283	9	283	340	150	340
227	0	227	284	3	284	341	60	341
228	1	228	285	4	285	342	40	342

FIG. X1.6 Valve B Complete Test Data *(continued)*

0	1 counts	2 time (min)
343	20	343
344	30	344
345	10	345
346	10	346
347	5	347
348	5	348
349	2	349
350	1	350
351	0	351
352	0	352
353	0	353
354	0	354
355	0	355
356	0	356
357	0	357
358	0	358
359	0	359
360	0	360
361	0	361
362	0	362
363	0	363
364	0	364
365	0	365
366	0	366
367	0	367
368	1	368
369	0	369
370	0	370
371	2	371
372	0	372
373	0	373
374	0	374
375	0	375

FIG. X1.6 Valve B Complete Test Data *(continued)*

DATE: _____
TIME: _____
OPERATOR: _____

TEST COMPONENT: _____
MANUFACTURER: _____
MODEL#: _____
SERIAL#: _____
LOT#: _____

TEST INSTRUMENT: _____
CNC MANUFACTURER: _____
MODEL#: _____
SERIAL#: _____
SAMPLE FLOW RATE: _____
CALIBRATION DATE: _____

TEST GAS: _____
DEW POINT: _____

FIG. X1.7 Particle Data Summary Sheet

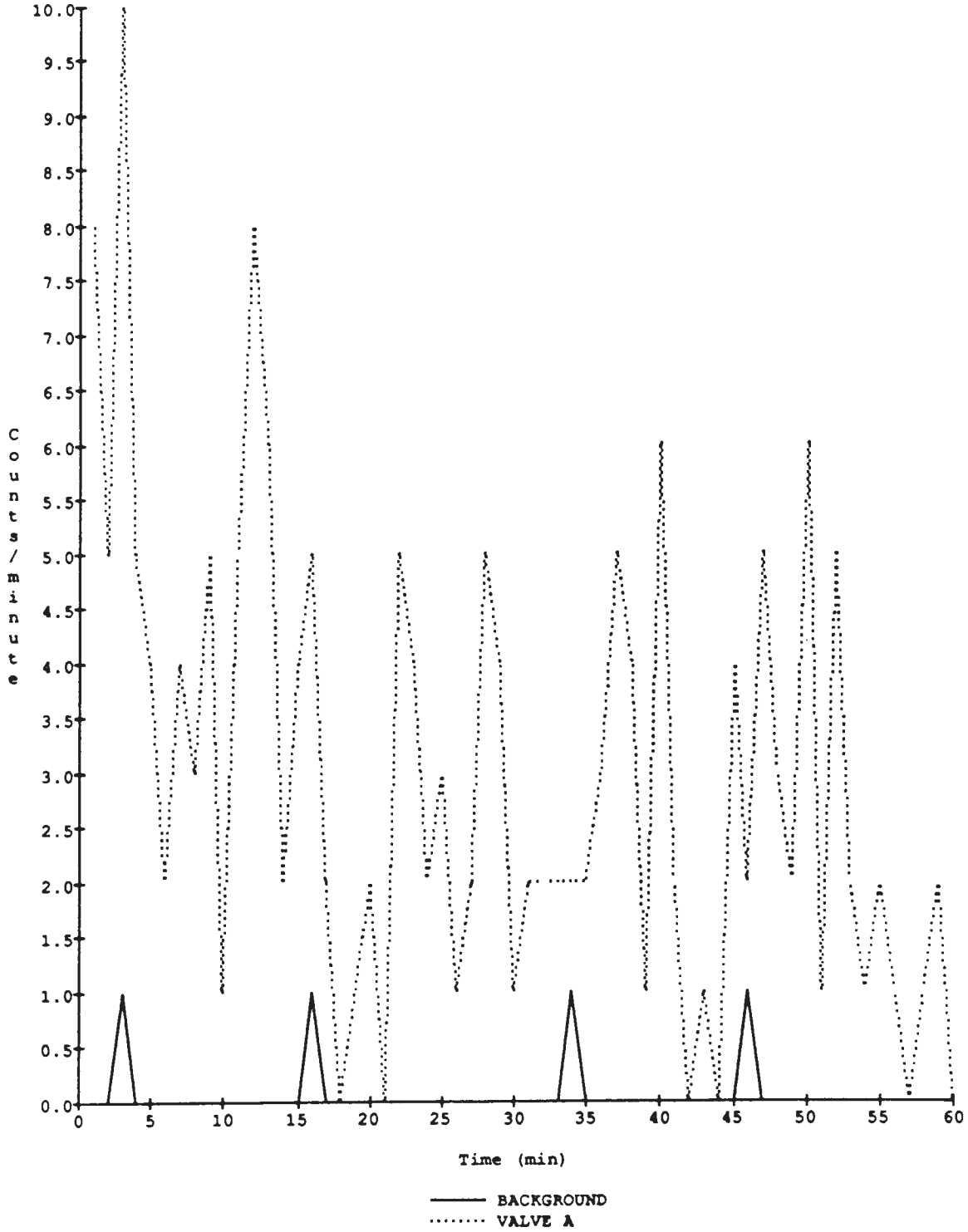

FIG. X1.8 Valve A Static Test

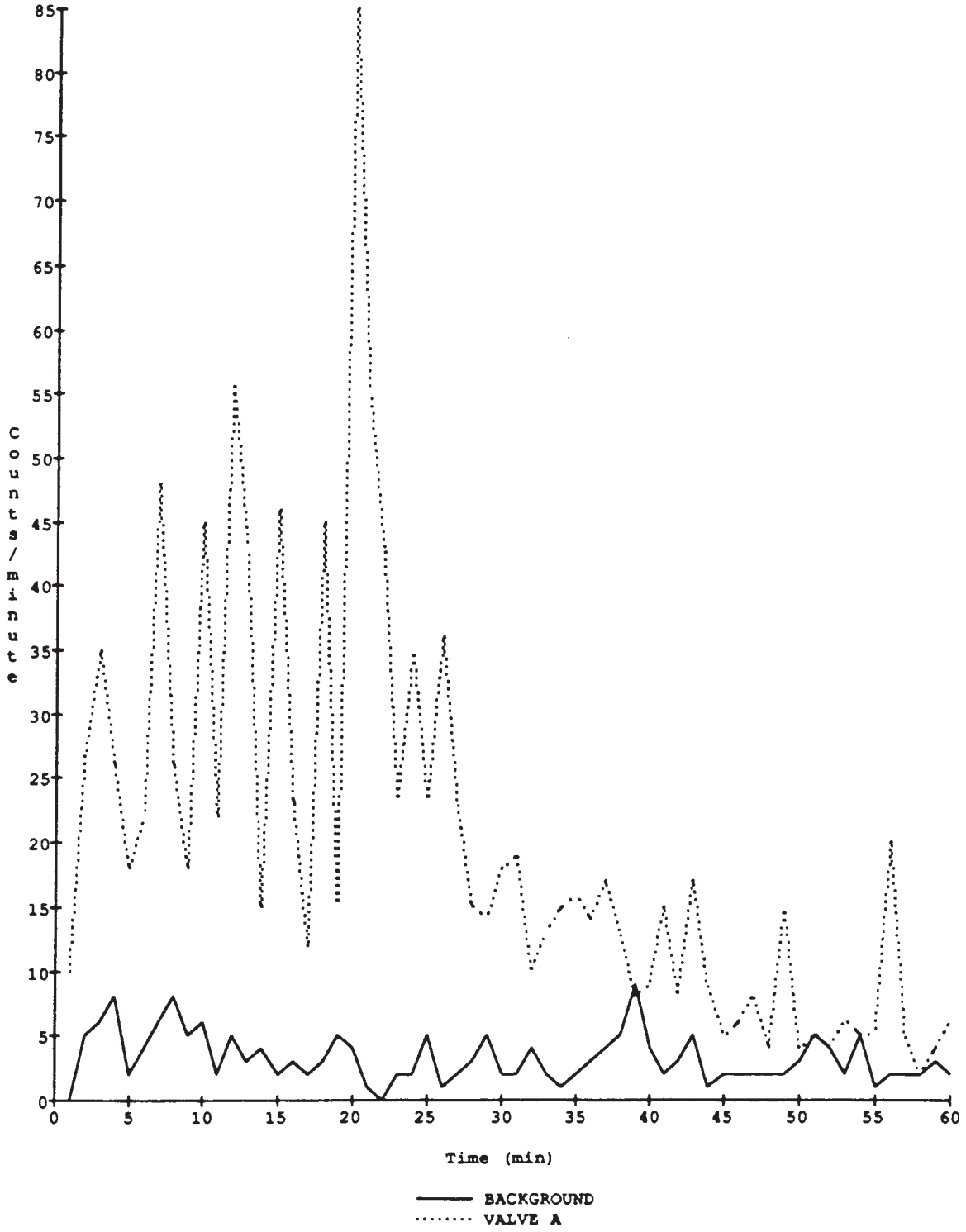

FIG. X1.9 Valve A Dynamic Test

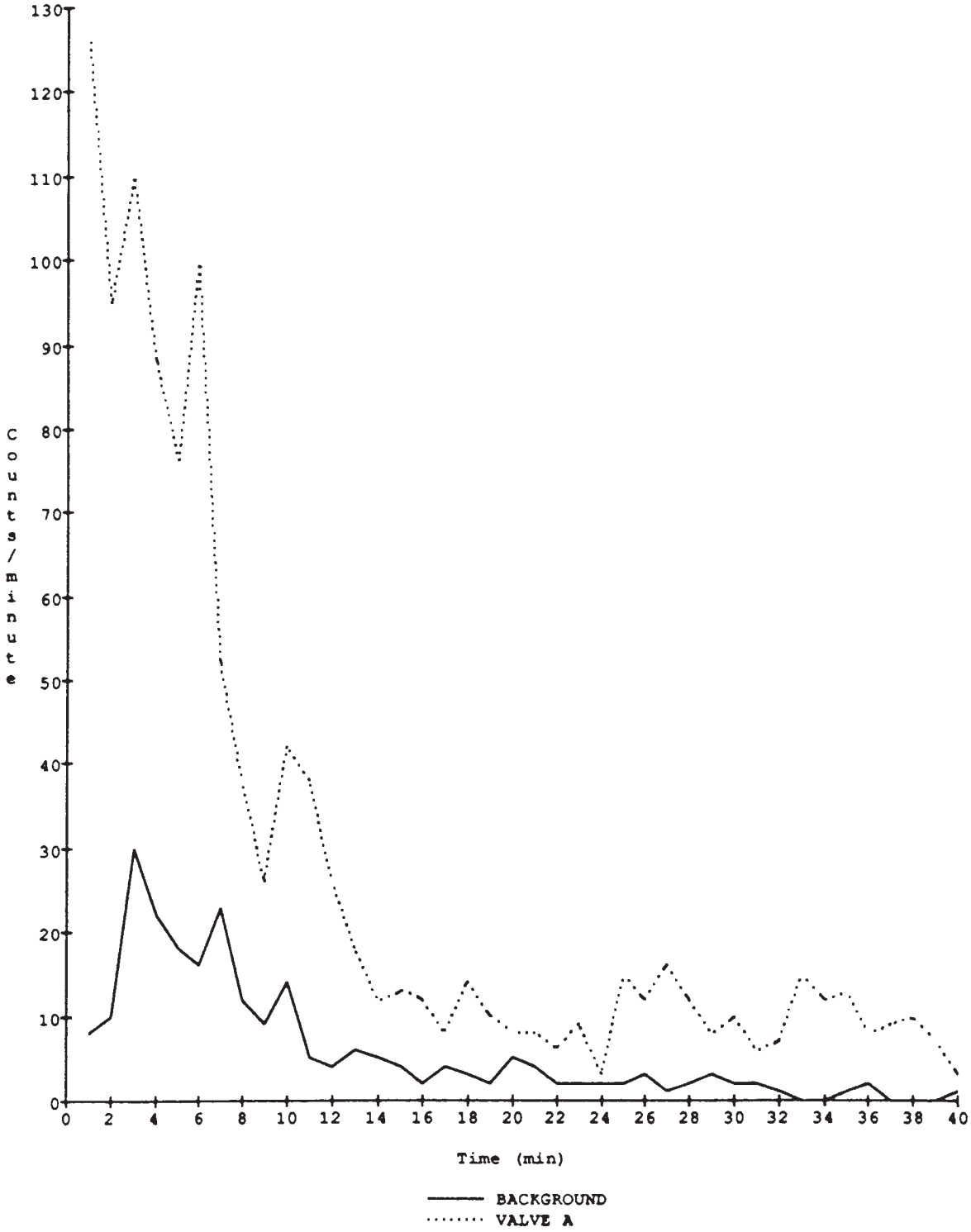

FIG. X1.10 Valve A Impact Test

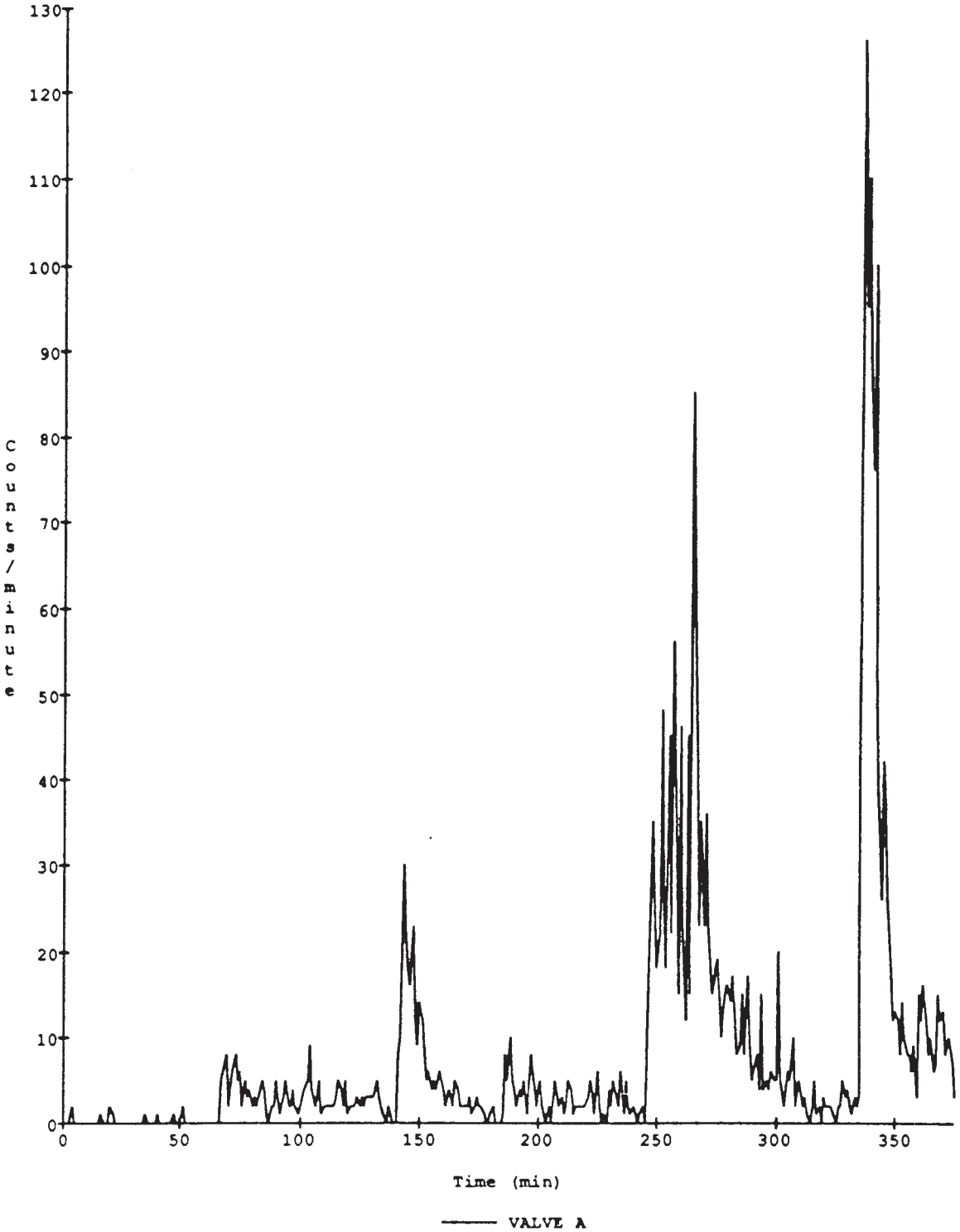

FIG. X1.11 Valve A Complete Test

STATIC BACKGROUD		DYNAMIC BACKGROUND		PURGE BACKGROUND		IMPACT BACKGROUND		PURGE BACKGROUND	
TIME	COUNTS	TIME	COUNTS	TIME	COUNTS	TIME	COUNTS	TIME	COUNTS
1		1		1		1		1	
2		2		2		2		2	
3		3		3		3		3	
4		4		4		4		4	
5		5		5		5		5	
6		6		6		6		6	
7		7		7		7		7	
8		8		8		8		8	
9		9		9		9		9	
10		10		10		10		10	
11		11						11	
12		12						12	
13		13						13	
14		14						14	
15		15						15	
16		16						16	
17		17						17	
18		18						18	
19		19						19	
20		20						20	
21		21						21	
22		22						22	
23		23						23	
24		24						24	
25		25						25	
26		26						26	
27		27						27	
28		28						28	
29		29						29	
30		30						30	

FIG. X1.12 Particle Background Data

31		31							
32		32							
33		33							
34		34							
35		35							
36		36							
37		37							
38		38							
39		39							
40		40							
41		41							
42		42							
43		43							
44		44							
45		45							
46		46							
47		47							
48		48							
49		49							
50		50							
51		51							
52		52							
53		53							
54		54							
55		55							
56		56							
57		57							
58		58							
59		59							
60		60							

FIG. X1.12 Particle Background Data *(continued)*

STATIC BACKGROUD		DYNAMIC BACKGROUND		PURGE BACKGROUND		IMPACT BACKGROUND		PURGE BACKGROUND	
TIME	COUNTS	TIME	COUNTS	TIME	COUNTS	TIME	COUNTS	TIME	COUNTS
1		1		1		1		1	
2		2		2		2		2	
3		3		3		3		3	
4		4		4		4		4	
5		5		5		5		5	
6		6		6		6		6	
7		7		7		7		7	
8		8		8		8		8	
9		9		9		9		9	
10		10		10		10		10	
11		11						11	
12		12						12	
13		13						13	
14		14						14	
15		15						15	
16		16						16	
17		17						17	
18		18						18	
19		19						19	
20		20						20	
21		21						21	
22		22						22	
23		23						23	
24		24						24	
25		25						25	
26		26						26	
27		27						27	
28		28						28	
29		29						29	
30		30						30	

FIG. X1.13 Particle Test Data

31		31							
32		32							
33		33							
34		34							
35		35							
36		36							
37		37							
38		38							
39		39							
40		40							
41		41							
42		42							
43		43							
44		44							
45		45							
46		46							
47		47							
48		48							
49		49							
50		50							
51		51							
52		52							
53		53							
54		54							
55		55							
56		56							
57		57							
58		58							
59		59							
60		60							

FIG. X1.13 Particle Test Data *(continued)*

REFERENCES

(**1**) Agarwal, J. K. and Sem, G. J.,'' Continuous Flow, Single Particle Counting Condensation Nucleus Counter," *Journal of Aerosol Science*, Vol 11.4, July 1980, pp. 343–357.

(**2**) Hinds, W. Co., *Aerosol Technology: Properties, Behavior, and Measurements of Airborne Particles*, John Wiley and Sons, 1982, pp. 187–194.

(**3**) Fissan, H. and Schwientek, ''Sampling and Transport of Aerosols," *TSI Journal of Particle Instrumentation*, Vol 2.2, July to December 1987, pp. 3–10.

(**4**) Van Slooten, R. A., ''Statistical Treatment of Particle Counts in Clean Gases," *Microcontamination*, Vol 4.2, February 1986, pp. 32–38.

(**5**) Dickie, D. E., ed. *Crane Handbook*, Construction Safety Association of Toronto, Ontario, Canada, 1975.

ASTM International takes no position respecting the validity of any patent rights asserted in connection with any item mentioned in this standard. Users of this standard are expressly advised that determination of the validity of any such patent rights, and the risk of infringement of such rights, are entirely their own responsibility.

This standard is subject to revision at any time by the responsible technical committee and must be reviewed every five years and if not revised, either reapproved or withdrawn. Your comments are invited either for revision of this standard or for additional standards and should be addressed to ASTM International Headquarters. Your comments will receive careful consideration at a meeting of the responsible technical committee, which you may attend. If you feel that your comments have not received a fair hearing you should make your views known to the ASTM Committee on Standards, at the address shown below.

This standard is copyrighted by ASTM International, 100 Barr Harbor Drive, PO Box C700, West Conshohocken, PA 19428-2959, United States. Individual reprints (single or multiple copies) of this standard may be obtained by contacting ASTM at the above address or at 610-832-9585 (phone), 610-832-9555 (fax), or service@astm.org (e-mail); or through the ASTM website (www.astm.org).