Designation: D 3796 – 90 (Reapproved 1998)

Standard Practice for Calibration of Type S Pitot Tubes[1]

This standard is issued under the fixed designation D 3796; the number immediately following the designation indicates the year of original adoption or, in the case of revision, the year of last revision. A number in parentheses indicates the year of last reapproval. A superscript epsilon (ϵ) indicates an editorial change since the last revision or reapproval.

1. Scope

1.1 This practice covers the determination of Type S pitot tube coefficients in the gas velocity range from 305 to 1524 m/min or 5.08 to 25.4 m/s (1000 to 5000 ft/min). The method applies both to the calibration of isolated Type S pitot tubes (see 5.1), and pitobe assemblies (see 5.2).

1.2 This practice outlines procedures for obtaining Type S pitot tube coefficients by calibration at a single-velocity setting near the midpoint of the normal working range (see 5.3). Type S pitot coefficients obtained by this method will generally be valid to within ±3 % over the normal working range. If a more precise correlation between Type S pitot tube coefficient and velocity is desired, multivelocity calibration technique (Annex A1) should be used.

1.3 This practice may be used for the calibration of thermal anemometers for gas velocities in excess of 3 m/s (10 ft/s).

1.4 *This standard does not purport to address all of the safety concerns, if any, associated with its use. It is the responsibility of the user of this standard to establish appropriate safety and health practices and determine the applicability of regulatory limitations prior to use.*

2. Referenced Document

2.1 *ASTM Standards:*

D 1356 Terminology Relating to Sampling and Analysis of Atmospheres[2]

3. Terminology

3.1 For definitions of terms used in this test method, refer to Terminology D 1356.

3.2 *Definitions:*

3.2.1 *isolated Type S pitot tube*—any Type S pitot tube that is calibrated or used alone (Fig. 1).

3.2.2 *normal working velocity range*—the range of gas velocities ordinarily encountered in industrial smokestacks and ducts: approximately 305 to 1524 m/min or 5.08 to 25.4 m/s (1000 to 5000 ft/min).

3.2.3 *pitobe assembly*—any Type S pitot tube that is calibrated or used while attached to a conventional isokinetic source-sampling probe (designed according to Martin **(1)**[3] or allowable modifications thereof; see also Fig. 7).

4. Summary of Practice

4.1 The coefficients of a given Type S pitot tube are determined from alternate differential pressure measurements, made first with a standard pitot tube, and then with the Type S pitot tube, at a predetermined point in a confined, flowing gas stream. The Type S pitot coefficient is equal to the product of the standard pitot tube coefficient, C_p (std), and the square root of the ratio of the differential pressures indicated by the standard and Type S pitot tubes.

5. Significance and Use

5.1 The Type S pitot tube (Fig. 1) is often used to measure the velocity of flowing gas streams in industrial smokestacks and ducts. Before a Type S pitot tube is used for this purpose, its coefficients must be determined by calibration against a standard pitot tube **(2).**

6. Apparatus

6.1 *Flow System*—Calibration shall be done in a flow system designed in accordance with the criteria illustrated in Fig. 2and described in 6.1.1 through 6.1.5.

6.1.1 The flowing gas stream shall be confined within a definite cross-sectional area; the cross section shall be preferably circular or rectangular **(3).** For circular cross sections, the minimum duct diameter shall be 305 mm (12 in.). For rectangular cross sections, the width shall be at least 254 mm (10 in.). Other regular cross-section geometries (for example, hexagonal or octagonal) are permissible, provided that they have cross-sectional areas of at least 645 cm^2 (100 $in.^2$).

6.1.2 It is recommended that the cross-sectional area of the flow-system duct be constant over a distance of 10 or more duct diameters. For rectangular cross sections, use an equivalent diameter, calculated as follows, to determine the number of duct diameters:

$$D_e = 2LW/(L + W) \quad (1)$$

[1] This practice is under the jurisdiction of ASTM Committee D22 on Sampling and Analysis of Atmospheres and is the direct responsibility of Subcommittee D22.01 on Quality Control.

Current edition approved Nov. 30, 1990. Published January 1991. Originally published as D 3796 – 79. Last previous edition D 3796 – 90 (1994)$^{\epsilon 1}$.

[2] *Annual Book of ASTM Standards,* Vol 11.03.

[3] The boldface numbers in parentheses refer to the list of references at the end of this practice.

Copyright © ASTM International, 100 Barr Harbor Drive, PO Box C700, West Conshohocken, PA 19428-2959, United States.

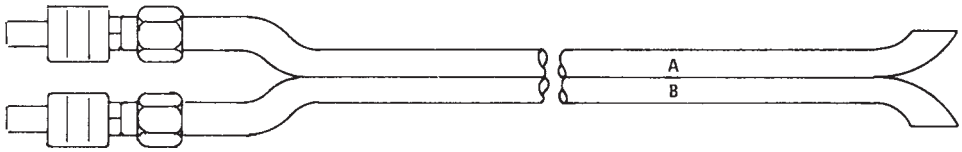

FIG. 1 Isolated Type-S Pitot Tube

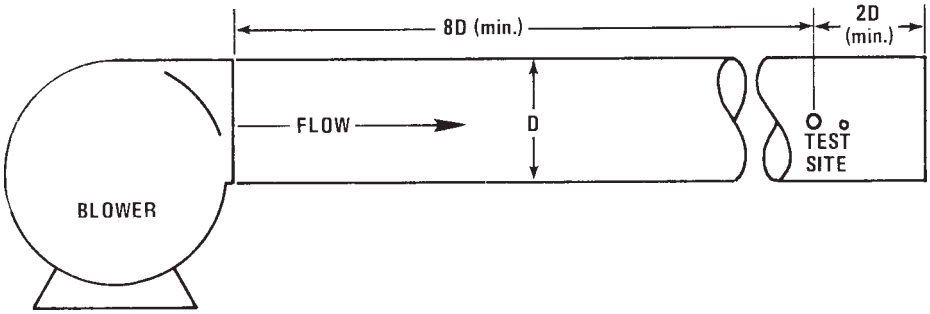

FIG. 2 Pitot Tube Calibration System

where:
D_e = equivalent diameter,
L = length of cross section, and
W = width of cross section.

For regular polygonal ducts, use an equivalent diameter, equal to the diameter of the inscribed circle, to determine the number of duct diameters.

6.1.3 To ensure the presence of stable, well-developed flow patterns at the calibration site (test section), it is recommended that the site be located at least 8 duct diameters (or equivalent diameters) downstream and 2 diameters upstream from the nearest flow disturbances. If the 8 and 2-diameter criteria cannot be met, the existence of stable, developed flow at the test site must be adequately demonstrated.

6.1.4 The flow-system fan shall have the capacity to generate a test-section velocity of about 909 m/min or 15.2 m/s (3000 ft/min); this velocity should be constant with time. The fan can be located either upstream (Fig. 2) or downstream from the test-section.

6.1.5 Two entry ports, one each for the Type S and standard pitot tubes, shall be cut in the test section. The standard pitot tube entry port shall be located slightly downstream of the Type S port, so that the standard and Type S impact openings will lie in the same plane during calibration. To facilitate alignment of the pitot tubes during calibration, it is advisable that the test section be constructed of acrylic or similar transparent material.

6.2 *Standard Pitot Tube*, used to calibrate the Type S pitot tube. The standard pitot tube shall have a known coefficient, obtained preferably directly from the National Institute of Standards and Technology in Gaithersburg, MD. Alternatively, a modified ellipsoidal-nosed pitot static tube, designed as shown in Fig. 3 may be used **(4).** Note that the coefficient of the ellipsoidal-nosed tube is a function of the stem/static hole distance; therefore, Fig. 4 should be used as a guide for determining the precise coefficient value.

6.3 *Type S Pitot Tube*, (isolated pitot or pitobe assembly) either a commercially available model or constructed according to Martin **(1)** or allowable modifications thereof.

6.4 *Differential Pressure Gage*—An inclined manometer, or equivalent device, shall be used to measure differential pressure. The gage shall be capable of measuring ΔP to within ±0.13 mm water or 1.2 Pa (±0.005 in. water).

6.5 *Pitot Lines*—Flexible lines, made of poly(vinyl chloride) (or similar material) shall be used to connect the standard and Type S pitot tubes to the differential-pressure gage.

7. Procedure

7.1 Assign a permanent identification number to the Type S pitot tube. Mark or engrave this number on the body of the tube. Mark one leg of the tube "A," and the other, "B."

7.2 Prepare the differential-pressure gage for use. If an inclined manometer is to be used, be sure that it is properly filled, and that the manometer fluid is free of contamination.

7.3 Level and zero the manometer (if used). Inspect all pitot lines and check for leaks; repair or replace lines if necessary.

7.4 Turn on the flow system fan and allow the flow to stabilize; the test section velocity should be about 909 m/min or 15.2 m/s (3000 ft/min). Seal the Type S entry port.

7.5 Determine an appropriate calibration point. Use the following guidelines:

7.5.1 For isolated Type S pitot tubes (or pitot tube-thermocouple combinations), select a calibration point at or near the center of the duct.

7.5.2 For pitobe assemblies, choose a point for which probe blockage effects are minimal; the point should be as close to the center of the duct as possible. To determine whether a given point will be acceptable for use as a calibration point, make a projected-area model of the pitobe assembly (Fig. 5), with the impact openings of the Type S pitot tube centered at the point. For assemblies without external sheaths (Fig. 5(a)), the point will be acceptable if the theoretical probe blockage, calculated as shown in Fig. 5, is less than or equal to 2 %. For assemblies with external sheaths (Fig. 5(b)), the point will be acceptable if the theoretical probe blockage is 3 % or less **(5).**

7.6 Connect the standard pitot tube to the differential-pressure gage. Position the standard tube at the calibration point; the tip of the tube should be pointed directly into the

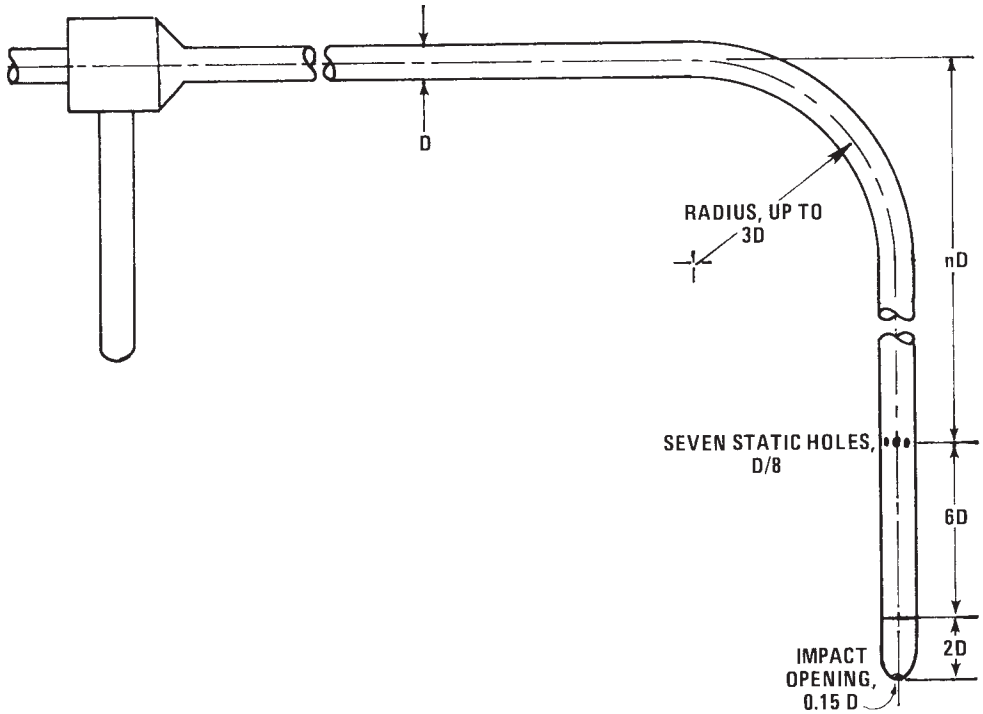

FIG. 3 Ellipsoidal Nosed Pitot-Static Tube

flow. Particular care should be taken in aligning the tube, to avoid yaw and pitch angle errors. Once the standard pitot tube is in position, seal the entry port surrounding the tube.

7.7 Take a differential-pressure reading with the standard pitot tube; record this value in a data table similar to the one shown in Fig. 6. Remove the standard pitot tube from the duct and disconnect it from the differential pressure gage. Seal the standard pitot entry port.

7.8 Connect the Type S pitot tube to the differential-pressure gage and open the Type S entry port. Insert and align the Type S pitot tube so that its "A" side impact opening is positioned at the calibration point, and is pointed directly into the flow. Seal the entry port surrounding the tube.

7.9 Take a differential-pressure reading with the Type S pitot tube; record this value in the data table. Remove the Type S pitot tube from the duct; disconnect the tube from the differential-pressure gage. Seal the Type S entry port.

7.10 Repeat procedures 7.6 through 7.9, until three pairs of differential-pressure readings have been obtained.

7.11 Repeat procedures 7.6 through 7.10 above for the "B" side of the Type S pitot tube.

7.12 For pitobe assemblies in which the free space between the pitot tube and nozzle (dimension *x*, Fig. 7) is less than 19.0 mm (¾ in.) with a 12.7-mm (½-in.) inside diameter sampling nozzle in place, the value of the Type S pitot tube coefficient will be a function of the free space, which is, in turn, dependent upon nozzle size **(6);** therefore, for these assemblies, a separate calibration should be done, in accordance with procedures 7.6 through 7.11, with each of the commonly used nozzle sizes in place. Single-velocity calibration at the midpoint of the normal working range is suitable for this purpose **(7),** even though nozzles larger than 6.35-mm (¼-in.) inside diameter are not ordinarily used for isokinetic sampling at velocities around 909 m/min or 15.2 m/s (3000 ft/min).

8. Calculation

8.1 Calculate the value of the Type S pitot tube coefficient for each of the six pairs of differential-pressure readings (three from side A and three from side B), as follows:

$$C_p(\mathrm{s}) = C_p(\mathrm{std}) \sqrt{\frac{\Delta P_{\mathrm{std}}}{\Delta P_s}} \tag{2}$$

where:

C_p *(s)* = Type S pitot tube coefficient,
C_p *(std)* = coefficient of standard pitot tube,
ΔP_{std} = differential pressure measured by standard pitot tube, kPa (in. H_2O or mm H_2O), and
ΔP_s = differential pressure measured by Type S pitot tube, kPa (in. H_2O or mm H_2O).

8.2 Calculate the mean A and B side coefficients of the Type S pitot tube, as follows:

$$\bar{C}_p(\text{side A or B}) = \frac{\Sigma_1^3 C_p(\mathrm{s})}{3} \tag{3}$$

where:

$\bar{C}_p$ *(side A or B)* = mean A or B side coefficient, and
C_p *(s)* = individual value of Type S pitot coefficient, A or B side.

8.3 Subtract the mean A side coefficient from the mean B side coefficient. Take the absolute value of this difference.

8.4 Calculate the deviation of each of the A and B side coefficient values from its mean value, as follows:

$$\text{Deviation (A or B side)} = C_p(\mathrm{s}) - \bar{C}_p(\text{side A or B}) \tag{4}$$

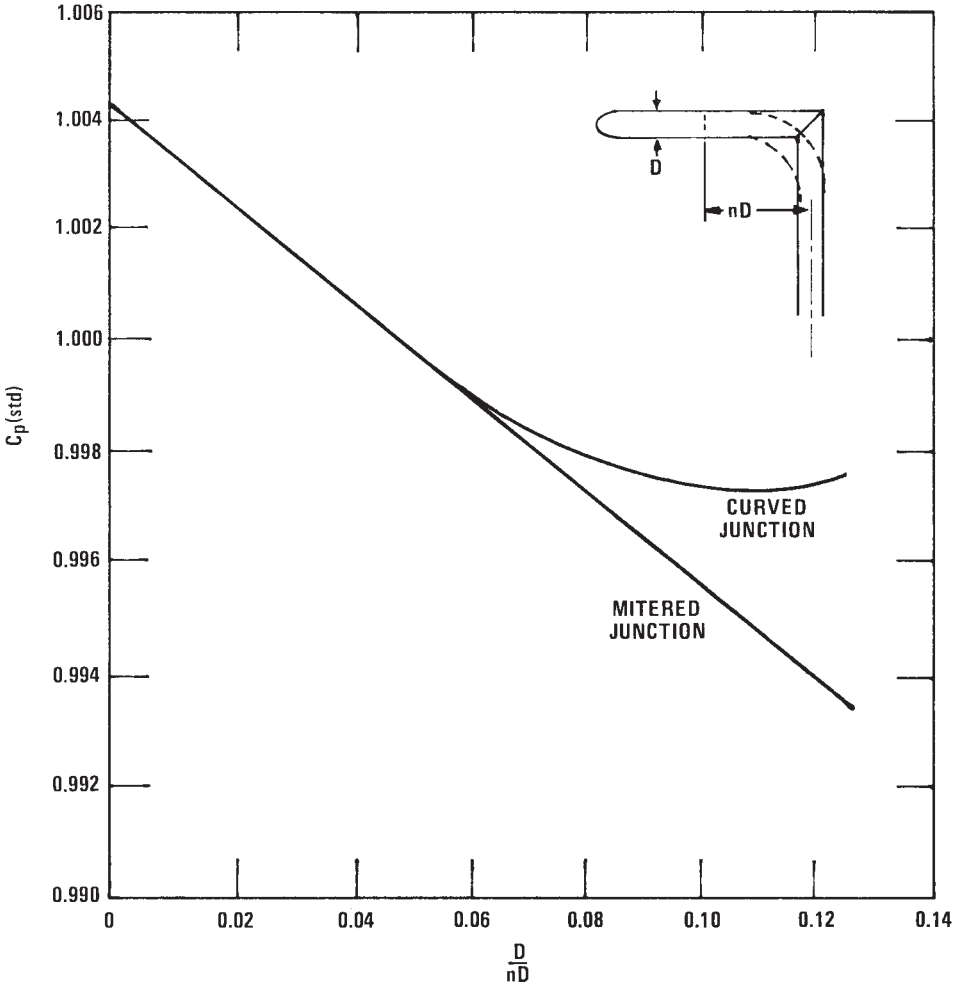

FIG. 4 Effect of Stem/Static Hole Distance on Basic Coefficient, C_p (std), of Standard Pitot-Static Tubes with Ellipsoidal Nose

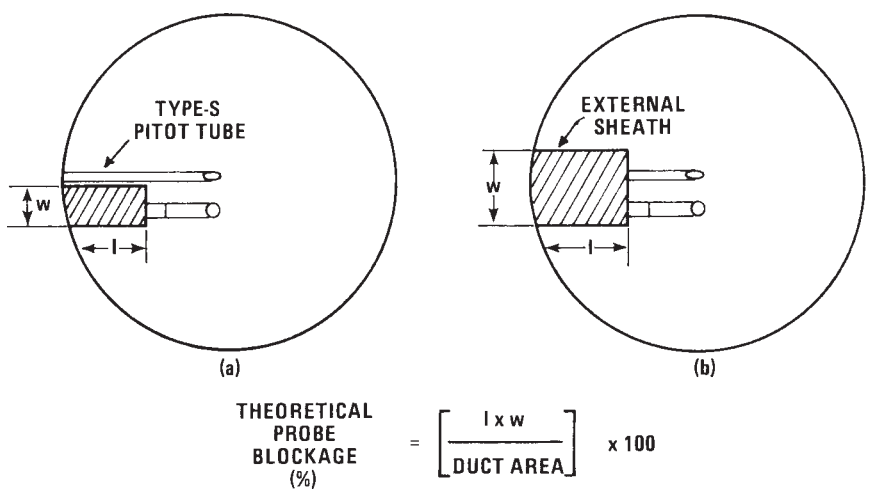

FIG. 5 Projected-Area Models for Typical Pitobe Assemblies

8.5 Calculate the average deviation from the mean, for both the A and B sides of the pitot tube, as follows:

$$\sigma(\text{side A or B}) = \frac{\Sigma_1^3[C_p(\text{s}) - \overline{C}_p(\text{side A or B})]}{3} \quad (5)$$

where σ(side A or B) = average deviation of C_p (s) values from the mean, A or B side.

9. Precision and Bias

9.1 *Precision*—The results of the calibration should not be considered suspect unless the following criteria fail to be met:

PITOT TUBE IDENTIFICATION NUMBER: _____ DATE: _____

CALIBRATED BY: _____

	A SIDE CALIBRATION			
RUN NO.	Δp_{std} in. H_2O (mm H_2O)	$\Delta p_{(s)}$ in. H_2O (mm H_2O)	$C_{p(s)}$	DEVIATION $C_{p(s)} - \bar{C}_{p(A)}$
1				
2				
3				
		$\bar{C}_p$ (SIDE A)		

	B SIDE CALIBRATION			
RUN NO.	Δp_{std} in. H_2O (mm H_2O)	$\Delta p_{(s)}$ in. H_2O (mm H_2O)	$C_{p(s)}$	DEVIATION $C_{p(s)} - \bar{C}_{p(B)}$
1				
2				
3				
		$\bar{C}_p$ (SIDE B)		

$$\text{AVERAGE DEVIATION} = \sigma\,(\text{A OR B}) = \frac{\sum_{1}^{3} \left| C_{p(s)} - \bar{C}_{p}(\text{A OR B}) \right|}{3} \leftarrow \text{MUST BE} \leqslant 0.0$$

$$\left| \bar{C}_p\,(\text{SIDE A}) - \bar{C}_p\,(\text{SIDE B}) \right| \leftarrow \text{MUST BE} \leqslant 0.01$$

NOTE—1 in. H_2O = 0.249 kPa; 1 mm H_2O = 0.0098 kPa.

FIG. 6 Calibration Data Table, Single-Velocity Calibration

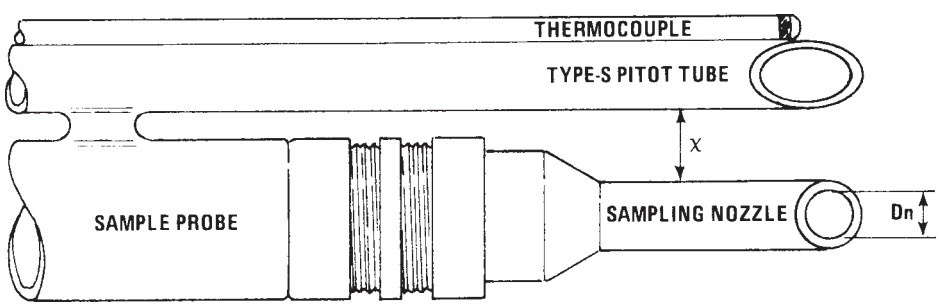

NOTE—This figure shows pitot tube-nozzle separation distance (x); the Type S pitot tube coefficient is a function of x, if x < ¾ in. where D_n = ½ in.

FIG. 7 Typical Pitobe Assembly

mm	in.
13	½
19	¾
76	3

9.1.1 The absolute value of the difference between the mean A and B side coefficients (see 8.3) is less than or equal to 0.01.

9.1.2 The A and B side values of average deviation are less than or equal to 0.01.

9.1.3 If criterion 9.1.1, or 9.1.2, or both, are not met, the Type S pitot tube may not be suitable for use. In such cases, repeat the calibration procedure two more times; do not use the Type S pitot tube unless both of these runs give satisfactory results.

9.2 *Bias*—In general, the mean A and B side coefficient values obtained by this method will be accurate to within ±3 % over the normal working range **(7).**

9.2.1 When a calibrated pitobe assembly is used to measure velocity in ducts having diameters (or equivalent diameters) between 305 and 915 mm (12 and 36 in.), the calibration coefficients may need to be adjusted slightly to compensate for probe blockage effects. A procedure for making these adjustments is outlined in A2. Conventional pitobe assemblies are not recommended for use in ducts smaller than 305 mm (12 in.) in diameter.

9.2.2 A Type S pitot tube shall be calibrated before its initial use. Thereafter, if the tube has been significantly damaged by field use (for example, if the impact openings are noticeably bent out of shape, nicked, or misaligned), it should be repaired and recalibrated. The data collected should be evaluated in the light of this recalibration.

9.2.3 The coefficient of a calibrated isolated Type S pitot tube may change if the isolated tube is attached to a source sampling probe and used as a pitobe assembly. The isolated and assembly coefficient values can only be considered equal when the intercomponent spacing requirements illustrated in Figs. 8-10 and are met.

10. Keywords

10.1 calibration; pitot tube; Type S pitot tube

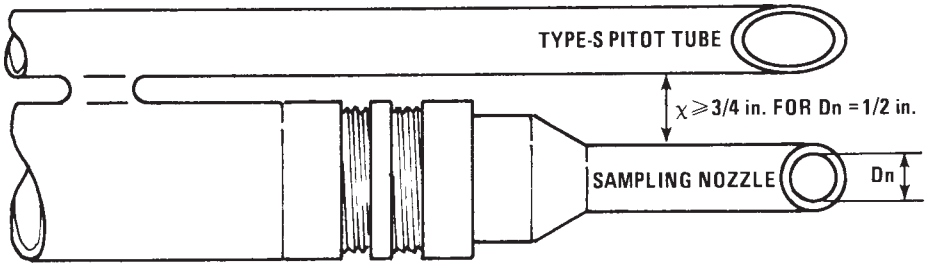

mm	in.
13	½
19	¾
76	3

FIG. 8 Minimum Pitot-Nozzle Separation Needed to Prevent Aerodynamic Interference

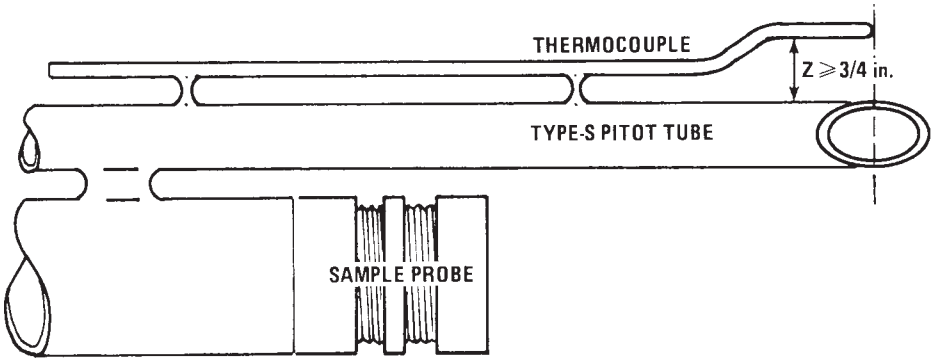

mm	\\m	in.
13	½	
19	¾	
76	3	

FIG. 9 Proper Thermocouple Placement to Prevent Aerodynamic Interference

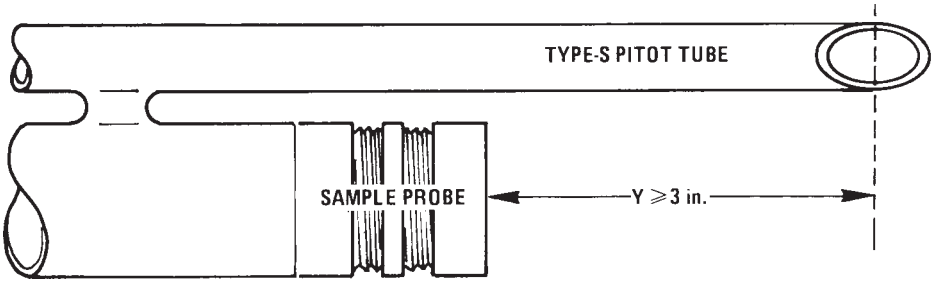

mm	in.
13	½
19	¾
76	3

FIG. 10 Minimum Pitot-Sample Probe Separation Needed to Prevent Aerodynamic Interference

ANNEXES

(Mandatory Information)

A1. PROCEDURE FOR MULTIVELOCITY CALIBRATION OF TYPE S PITOT TUBES

A1.1 Scope

A1.1.1 See 1.1.

A1.2 Referenced Documents

A1.2.1 See 2.1.

A1.3 Definitions

A1.3.1 See 3.1.1.
A1.3.2 See 3.1.2.
A1.3.3 See 3.1.3.

A1.4 Summary of Test Method

A1.4.1 Same as 4.1, except that the velocity of the flowing gas stream is varied over the normal working range during calibration.

A1.5 Apparatus

A1.5.1 *Flow System,* designed according to Figs. 2 and 6.1.1, 6.1.2, 6.1.3, and 6.1.5; instead of 6.1.4, the flow system shall have the capacity to generate at least four different, time-invariant test section velocities between 305 and 1524 m/min or 5.08 and 25.4 m/s (1000 and 5000 ft/min).

A1.5.2 *Standard Pitot Tube*—See 6.2.
A1.5.3 *Type S Pitot Tube*—See 6.3.
A1.5.4 *Differential Pressure Gage*—See 6.4.
A1.5.5 *Pitot Lines*—See 6.5.

A1.6 Procedure

A1.6.1 See 7.1, 7.2, and 7.3.

A1.6.2 Turn on the fan and generate a test section velocity of about 303 m/min or 15.2 m/s (1000 ft/min). Allow the flow to stabilize.

A1.6.3 See 7.5.

A1.6.4 Same as 6.6.

A1.6.5 Same as 7.7, except that the data shall be entered in a table similar to the one shown in Fig. A1.1.

A1.6.6 See 7.8, 7.9, and 7.10.

PITOT TUBE IDENTIFICATION NUMBER: _____ DATE: _____

CALIBRATED BY: _____

	A- OR B-SIDE CALIBRATION					
FAN SETTING	RUN NO.	ΔP_{std} in. H_2O (mm H_2O)	ΔP_s in. H_2O (mm H_2O)	$C_p(s)$	DEVIATION $C_p(s) - \bar{C}_p$	$\bar{V}$ ft/min (m/min)
A	1					
	2					
	3					
B	1					
	2					
	3					
C	1					
	2					
	3					
D	1					
	2					
	3					

AVERAGE DEVIATION AT EACH FAN SETTING $= \sigma = \dfrac{\sum_{1}^{3} |C_p(s) - \bar{C}_p|}{3}$ ← MUST BE ≤0.01

NOTE—1 in. H_2O = 0.249 kPa; 1 mm H_2O = 0.0098 kPa.

FIG. A1.1 Calibration Data Table, Multivelocity Calibration

A1.6.7 Repeat procedures A1.6.4 through A1.6.6, at a minimum of three more velocity settings between 303 and 1515 m/min or 5.08 and 25.4 m/s (1000 and 5000 ft/min); space the velocities at approximately equal intervals over this range. This completes the A side calibration of the Type S pitot tube.

A1.6.8 Calibrate the B side of the Type S pitot tube in the same manner as side A.

NOTE A1.1—For pitobe assemblies in which the free-space between the pitot tube and nozzle (Fig. 7) is less than 19.0 mm (¾ in.) with a 12.7-mm (½-in.) inside diameter sampling nozzle in place, perform a separate calibration with each of the commonly used nozzle sizes in place. Calibration data may, if desired, be taken over the entire normal working range for each nozzle size; however, for the sake of simplicity, it is recommended that each nozzle size be studied only in that portion of the normal working range in which it is ordinarily used for isokinetic sampling (Fig. A1.2).

A1.7 Calculation

A1.7.1 At each A side velocity setting, calculate the three values of the Type S pitot tube coefficient, corresponding to runs No. 1, 2, and 3 (Fig. A1.1); use Eq 2. Calculate the average (mean) of these three coefficient values.

A1.7.2 For each mean coefficient value from A1.7.1, calculate the average deviation from the mean; use Eq 5.

A1.7.3 Repeat calculations A1.7.1 and A1.7.2 for the B side of the Type S pitot tube.

A1.7.4 Calculate the average test section velocity corresponding to each A and B side fan setting, using the equation as follows:

$$\bar{v} = KC_p \sqrt{\frac{T\Delta P_{std}}{P_b M}} \quad \text{(A1.1)}$$

where:

$\bar{v}$ = average test-section velocity at the particular fan setting, m/min or m/s (ft/min),

K = constant = 5130 for inch-pound units, 2100 for metric units,

C_p = coefficient of standard pitot tube,

P_b = barometric pressure during calibration, in. Hg (mm Hg) (kPa),

M = molecular weight of air, 29.0 lb/lb · mol (g/g · mol),

T = temperature of air stream during calibration, °R (K), and

$\overline{\Delta P_{std}}$ = average of three standard pitot tube readings at the particular fan setting, mm H_2O (in. H_2O) (kPa).

A1.7.5 Make a plot of mean coefficient value versus average velocity, as shown in Fig. A1.3. Plot both the A side and B side data on a single set of coordinate axes.

A1.8 Precision and Accuracy

A1.8.1 *Precision*—The results of the calibrations shall not be considered suspect unless the following criteria fail to be met:

A1.8.1.1 All of the A and B side values of average deviation (see A1.7.2) are less than or equal to 0.01.

A1.8.1.2 The difference between the A and B side curves (Fig. A1.3) is less than or equal to 0.01 for all values of average velocity between 305 and 1524 m/min or 5.08 and 25.4 m/s (1000 and 5000 ft/min).

NOTE A1.2—If criterion A1.8.1.1, or A1.8.1.2, or both, fail to be met, the Type S pitot tube may not be suitable for use. Repeat the calibration

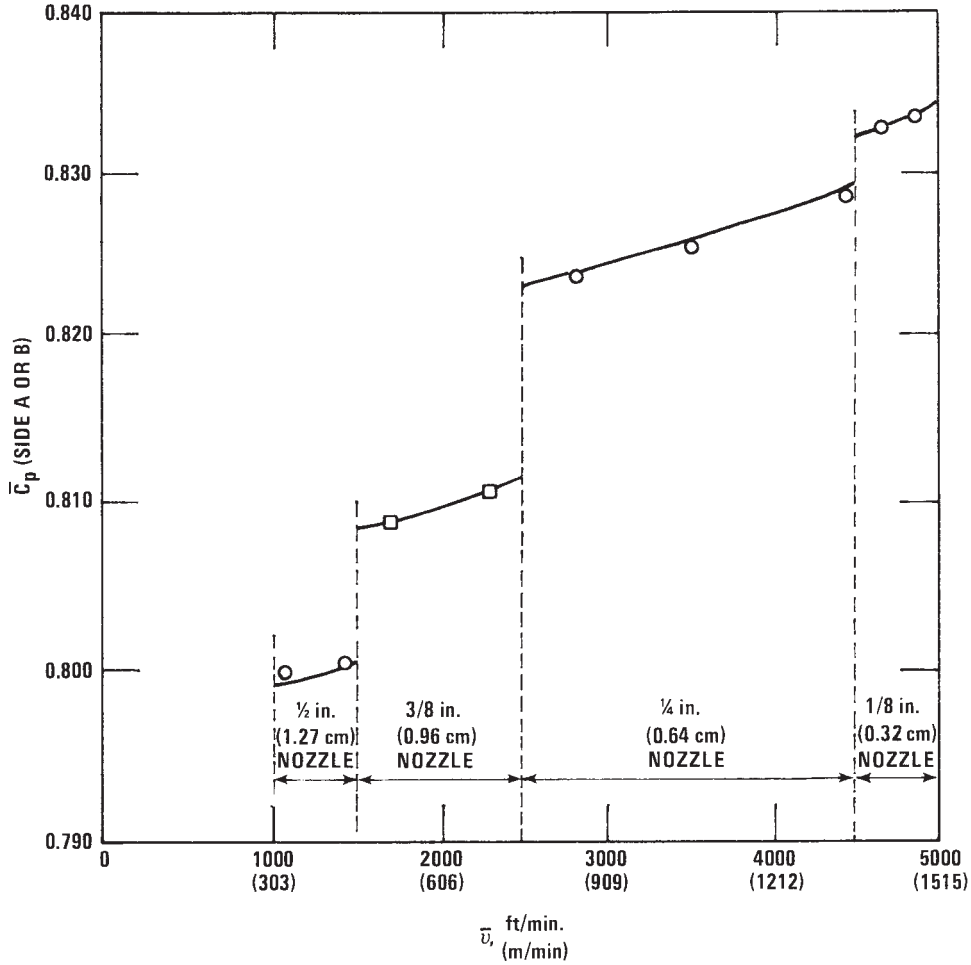

FIG. A1.2 Typical Multivelocity Calibration Curve for Pitobe Assemblies

procedure two more times; do not use the Type S pitot tube unless both of these runs give satisfactory results.

A1.8.2 *Accuracy*—Because of the precise correlation between Type S pitot coefficient and velocity obtainable by this method, coefficient values taken from a plot such as Fig. A1.3 should be accurate to within ±1 %.

NOTE A1.3—The considerations regarding sampling in small ducts, recalibration, and intercomponent spacing presented in 9.2.1 through 9.2.3, apply to this method.

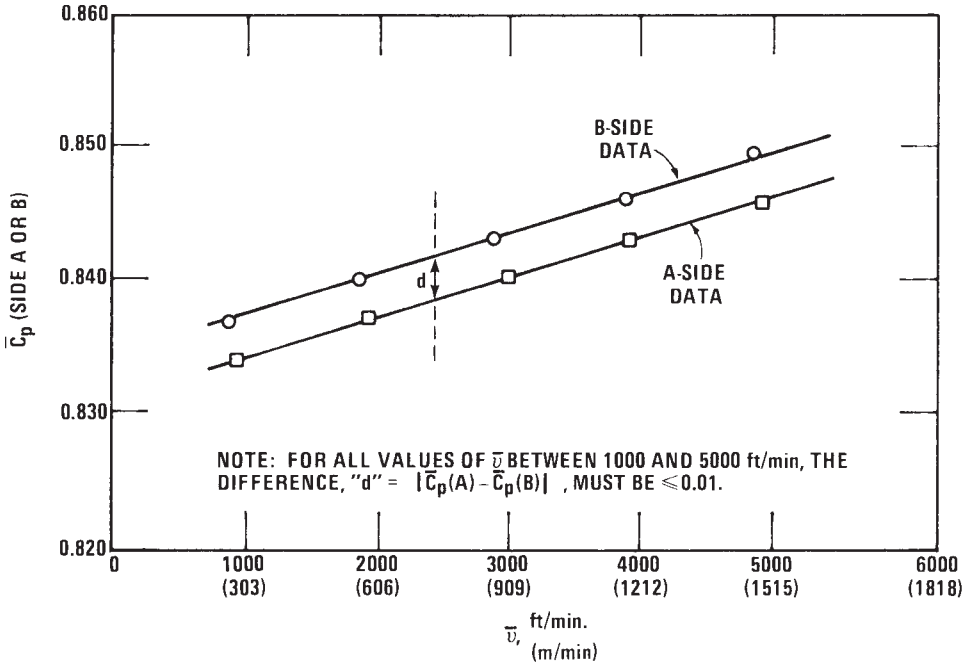

FIG. A1.3 Typical Calibration Curve, Multivelocity Calibration

A2. USE OF CALIBRATED PITOBE ASSEMBLIES TO MEASURE VELOCITY IN SMALL DUCTS

A2.1 When a pitobe assembly (Fig. 5) is used to measure velocity in a duct having a diameter (or equivalent diameter) between 305 and 914 mm (12 and 36 in.), the sample probe can block a significant part of the duct cross section, causing a local increase in the gas velocity. When appreciable probe blockage exists, the Type S pitot tube readings will tend to reflect the pseudo-high local velocity and will not be truly representative of the mainstream velocity **(7).** Therefore, in some instances, the calibration coefficient of the pitobe assembly may need to be adjusted to compensate for blockage effects before the assembly can be used to measure velocity in a small duct **(5).** To determine whether or not such adjustments are necessary, proceed as follows:

A2.1.1 For single-point sampling, make a projected-area model of the pitobe assembly with the sampling point in the center of the projected nozzle entry plane (Fig. A2.1). Calcu

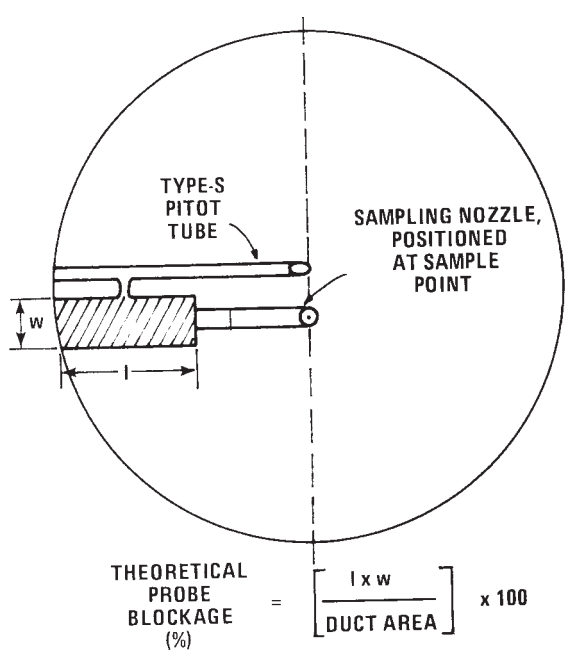

FIG. A2.1 Typical Projected-Area Model for Sampling of a Small Duct with a Pitobe Assembly

late the theoretical probe blockage, as shown in Fig. A2.1. Use Fig. A2.2 to adjust the calibration value of the Type-S pitot tube coefficient, if necessary.

A2.1.2 For sample traverses, make a separate projected-area model at each traverse point along a row or diameter (depending on whether the duct is rectangular or circular). In each model, the traverse point should be in the center of the projected nozzle entry plane. Calculate the average theoretical probe blockage, as follows:

$$B = \left[\frac{\Sigma_1^n l_n W_n}{n A_d} \right] \times 100 \qquad \text{(A2.1)}$$

where:

B = average theoretical probe blockage, %,
l_n = length of probe segment inside the duct at a particular traverse point, mm (in.),
W_n = width of probe segment inside the duct at a particular traverse point, mm (in.),
n = number of traverse points on a row or diameter, and
A_d = cross-sectional area of the duct, mm^2($in.^2$).

A2.1.3 Use Fig. A2.2 to adjust the calibration value of the pitobe assembly coefficient, if necessary.

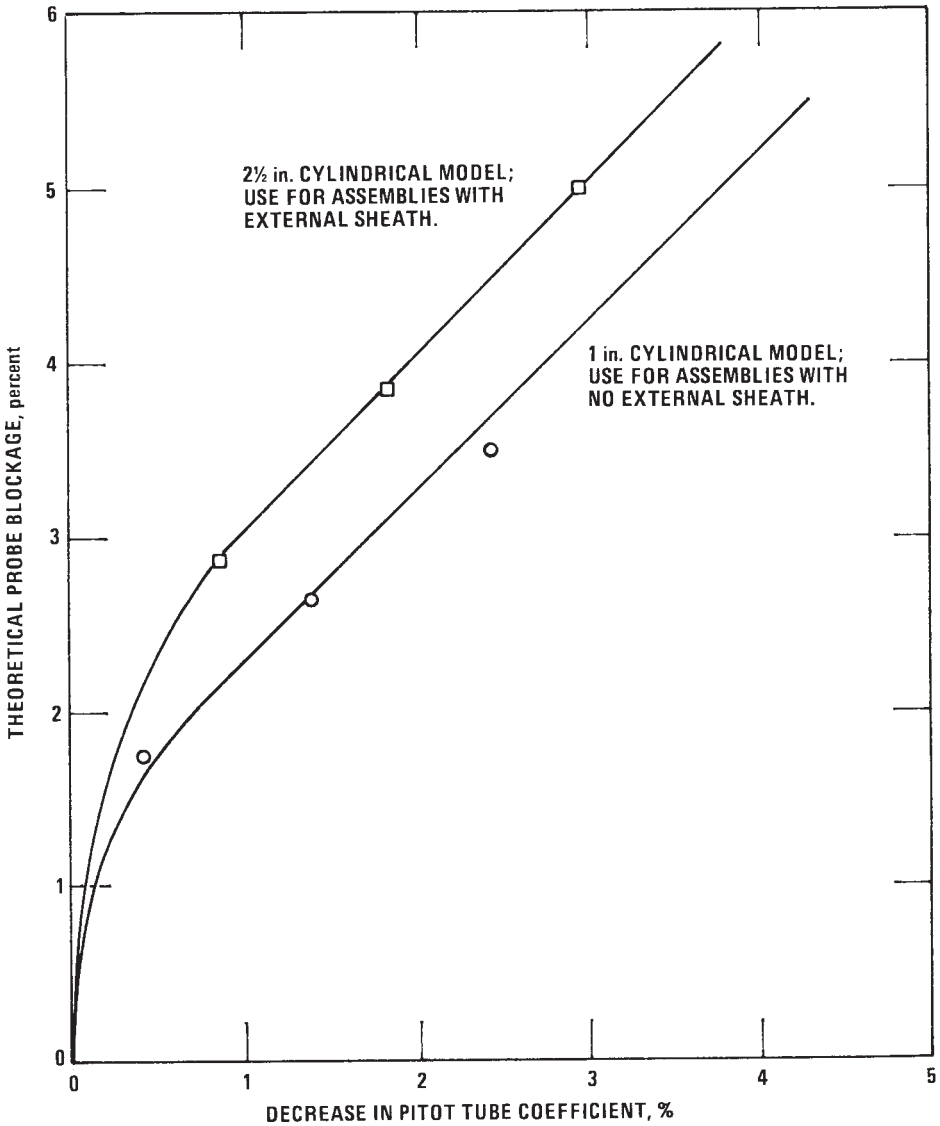

FIG. A2.2 Adjustment of Pitobe Assembly Coefficients to Account for Probe Blockage Effects in Small Ducts

REFERENCES

(**1**) Martin, R. M., "Construction Details of Isokinetic Source-Sampling Equipment," U.S. Environmental Protection Agency, Publication No. APTD-0581, Research Triangle Park, N.C., April 1971.

(**2**) "Standards of Performance for New Stationary Sources," *Federal Register,* Vol 36, No. 247, Dec. 23, 1971, p. 24 884.

(**3**) Vollaro, R. F., "Guidelines for Type-S Pitot Tube Calibration," U.S. Environmental Protection Agency, Durham, N.C., September 1975.

(**4**) "The Measurement of Fluid Flow in Pipes," British Standards Institute, BS 1042, London, England, 1971.

(**5**) Vollaro, R. F., "The Effects of the Presence of a Probe Sheath on Type-S Pitot Tube Accuracy," U.S. Environmental Protection Agency, Durham, N.C., August 1975.

(**6**) Vollaro, R. F., "The Effect of Aerodynamic Interference Between a Type-S Pitot Tube and Sampling Nozzle on the Value of the Pitot Tube Coefficient," U.S. Environmental Protection Agency, Durham, N.C., February 1975.

(**7**) Vollaro, R. F., "An Evaluation of Single-Velocity Calibration Technique as a Means of Determining Type-S Pitot Tube Coefficients," U.S. Environmental Protection Agency, Durham, N.C., August 1975.

ASTM International takes no position respecting the validity of any patent rights asserted in connection with any item mentioned in this standard. Users of this standard are expressly advised that determination of the validity of any such patent rights, and the risk of infringement of such rights, are entirely their own responsibility.

This standard is subject to revision at any time by the responsible technical committee and must be reviewed every five years and if not revised, either reapproved or withdrawn. Your comments are invited either for revision of this standard or for additional standards and should be addressed to ASTM International Headquarters. Your comments will receive careful consideration at a meeting of the responsible technical committee, which you may attend. If you feel that your comments have not received a fair hearing you should make your views known to the ASTM Committee on Standards, at the address shown below.

This standard is copyrighted by ASTM International, 100 Barr Harbor Drive, PO Box C700, West Conshohocken, PA 19428-2959, United States. Individual reprints (single or multiple copies) of this standard may be obtained by contacting ASTM at the above address or at 610-832-9585 (phone), 610-832-9555 (fax), or service@astm.org (e-mail); or through the ASTM website (www.astm.org).